RF MMIC Innovator www.berex.com

[Classification] Application Note

[Date] 2022.06

[Revision No.] Rev.1.1

[Measuring Instruments]

- NA_Agilent E5071B
- SA_Agilent N9020A
- SG_Agilent N5182A
- SG_IFR 3416

High Power Amplifier BT331

Application Note

Contents

0---END---0

1. BT331 _ 836MHz Application Note

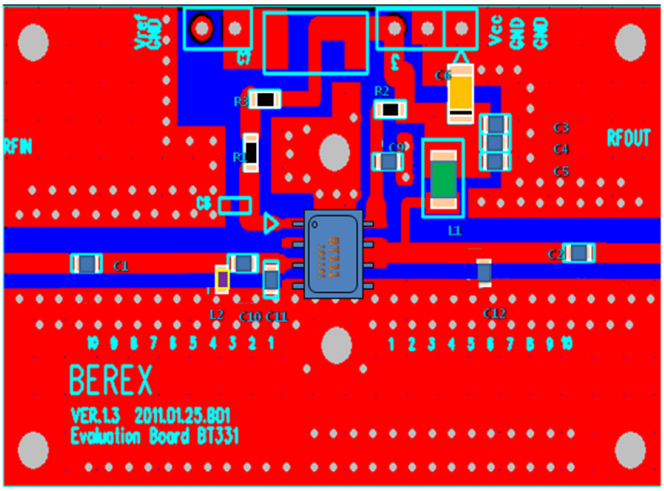

Ref. Des.	Description/ Part Number	Values	Tolerance
C1	1608 CAP	100pF	±5%
C2	1608 CAP	100pF	±5%
C3	1608 CAP	100pF	±5%
C4	1608 CAP	1000pF	±5%
C5	1608 CAP	1uF	±5%
C6	3216 Tantal	10uF	±20%
C7		DNP	
C8		DNP	
C9	1608 CAP	1pF	±5%
C10	1608 CAP	3.9pF	±5%
C11	1608 CAP	10pF	±5%
C12	1608 CAP	8pF	±5%
L1	2520 IND	33nH	±5%
L2	1608 IND	6.8nH	±5%
R1	1608 RES	4.3kohn	±5%
R2	1608 RES	100ohm	±5%
R3	1608 RES	0ohm	±5%
Q1	SOIC-8 PKG	BT331	

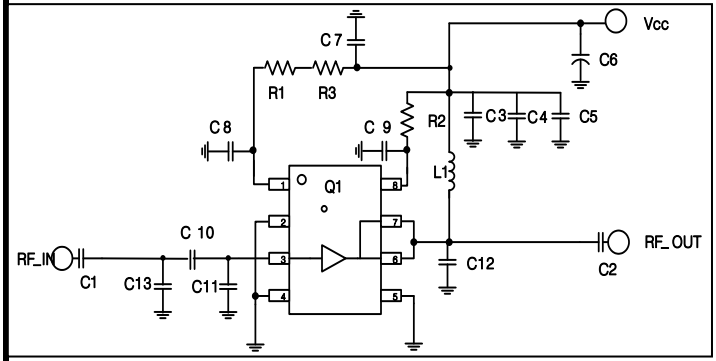

Note:

1. PCB: 31mil thick FR4
2. Distance between the center of the shunt Inductor (L2) and the input pin of BT331 is 5.25 mm.
3. Distance between the center of the series cap (C10) and the input pin of BT331 is 3.70 mm.
4. Distance between the center of the shunt cap (C11) and the input pin of BT331 is 1.50 mm.
5. Distance between the center of the shunt cap (C12) and the output pin of BT331 is 8.25 mm

TITLE	
BT331 Evaluation Board	
(836 MHz)	
Drawing Number	Rev.
Date	Drawn By
2011/04/11	YH, Kwon
FILE NAME	SHEET

1.1 BT331_836MHz Test Result

SN	Freq [MHz]	Vcc [V]	Icc [mA]	Gain [dB]	OIP3 [dBm](1)	P1dB [dBm]	IRL [dB]	ORL [dB]	NF [dB]
-	836	5	426	20.1	48.4	32.4	19.8	8.1	5.1

(1) OIP3 was tested @Pout=20dBm/tone (CW) 1MHz tone space

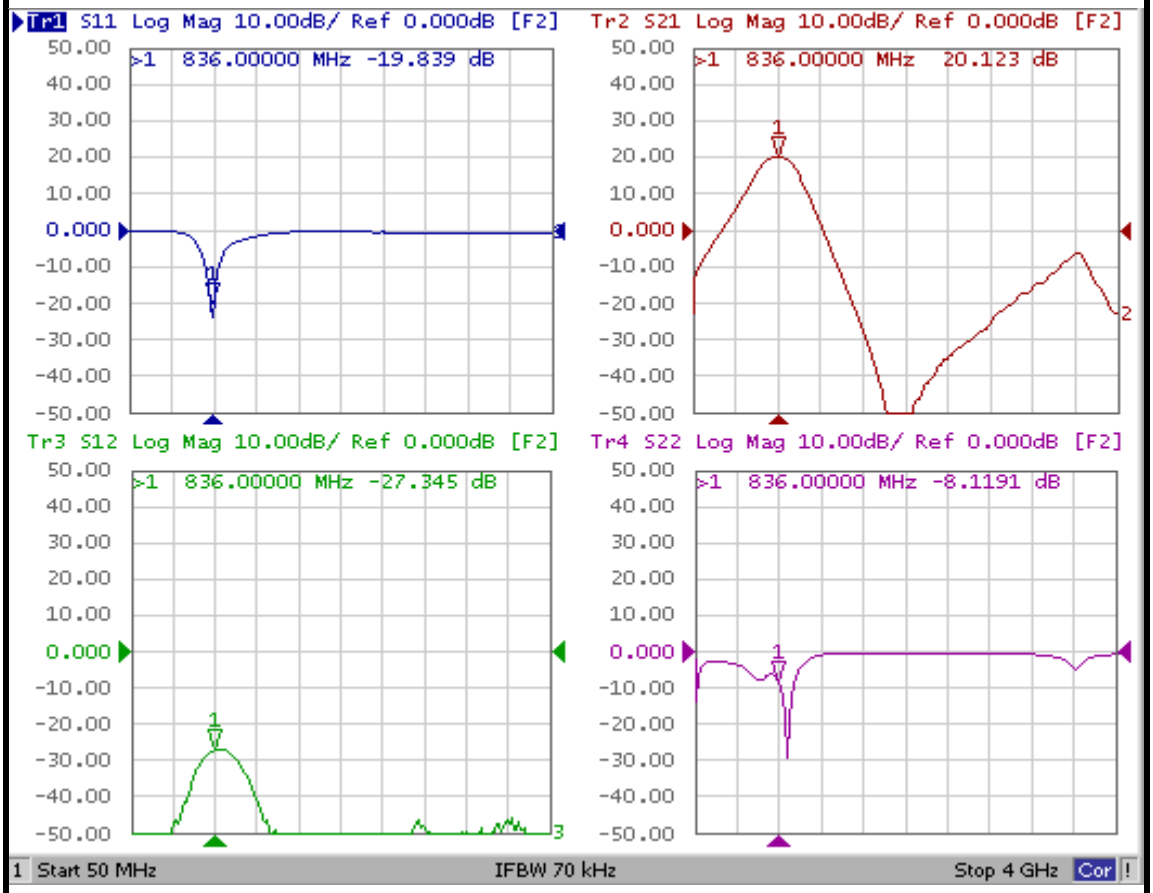

2. BT331_ 836MHz (Resister Insertion) Application Note

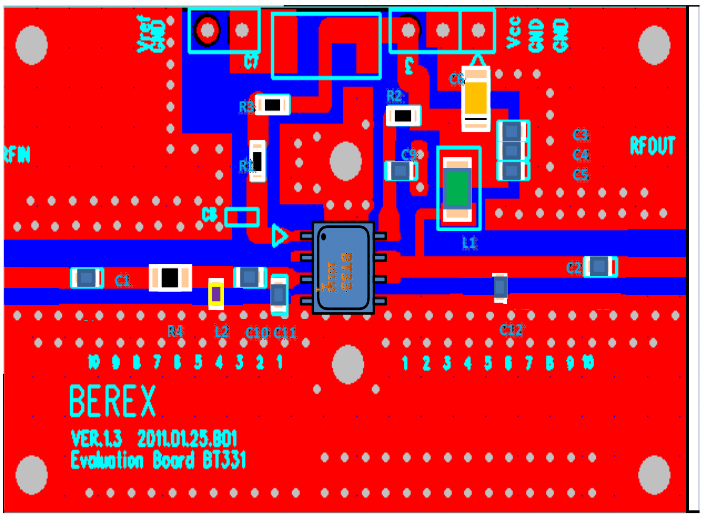

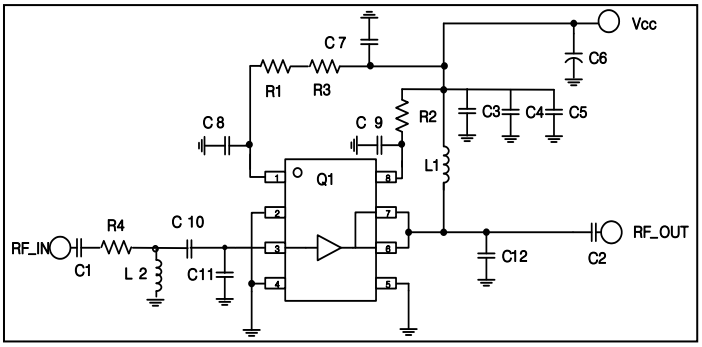

Ref. Des.	Description/ Part Number	Values	Tolerance
C1	1608 CAP	100pF	±5%
C2	1608 CAP	100pF	±5%
C3	1608 CAP	100pF	±5%
C4	1608 CAP	1000pF	±5%
C5	1608 CAP	1uF	±5%
C6	3216 Tantal	10uF	±20%
C7		DNP	
C8		DNP	
C9	1608 CAP	1pF	±5%
C10	1608 CAP	3.9pF	±5%
C11	1608 CAP	10pF	±5%
C12	1608 CAP	8pF	±5%
L1	2520 IND	33nH	±5%
L2	1608 IND	6.8nH	±5%
R1	1608 RES	4.3kohn	±5%
R2	1608 RES	100ohm	±5%
R3	1608 RES	0ohm	±5%
R4	1608 RES	22ohm	±5%
Q1	SOIC-8 PKG	BT331	

Note:

1. PCB: 31mil thick FR4
2. Distance between the center of thshunt Resistance (R4) and the input pin of BT331 is10.0 mm.
3. Distance between the center of the shunt Inductor (L2) and the input pin of BT331 is 5.25 mm.
4. Distance between the center of the series cap (C10) and the input pin of BT331is3.70mm.
5..Distance between the center of the shunt cap(C11)and the input pin of BT331 is1.50 mm.
6. Distance between the center of the shunt cap (C12) and the output pin ofBT331is8.25mm

TITLE	
BT331 Evaluation Board	
(836 MHz)	
Drawing Number	Rev.
Date	Drawn By
2011/04/11	YH, Kwon
FILE NAME	SHEET

2.1 BT331_836MHz (Resiser Insertion) Test Result

SN	Freq [MHz]	Vcc [V]	Icc [mA]	Gain [dB]	OIP3 [dBm](1)	P1dB [dBm]	IRL [dB]	ORL [dB]	NF [dB]
-	836	5	427	18.2	50.8	32.3	18.8	9.2	7.2

(1) OIP3 was tested @Pout=20dBm/tone (CW) 1MHz tone space

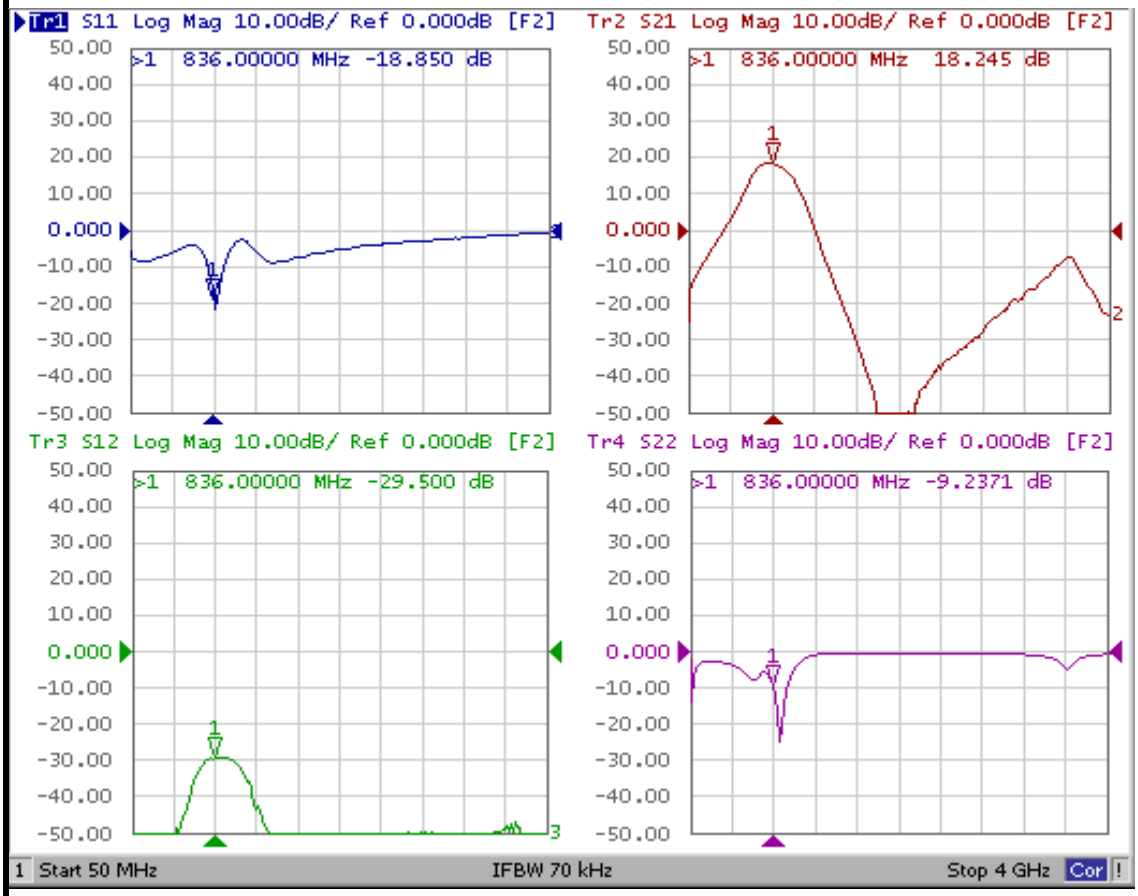

3. BT331_CDMA(824~894MHz) Application Note

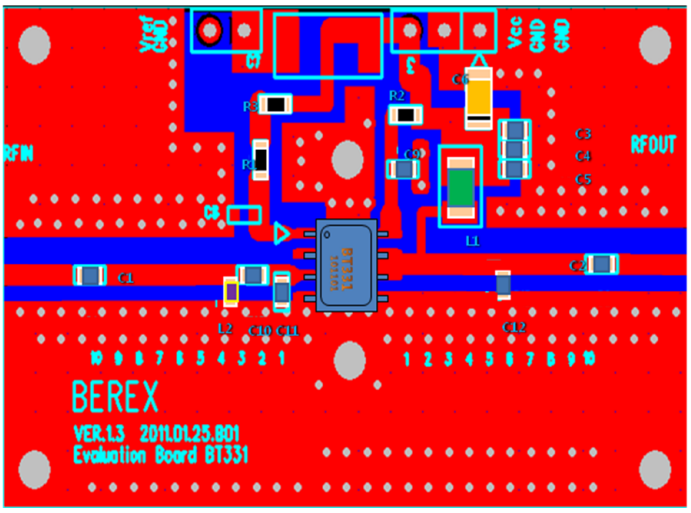

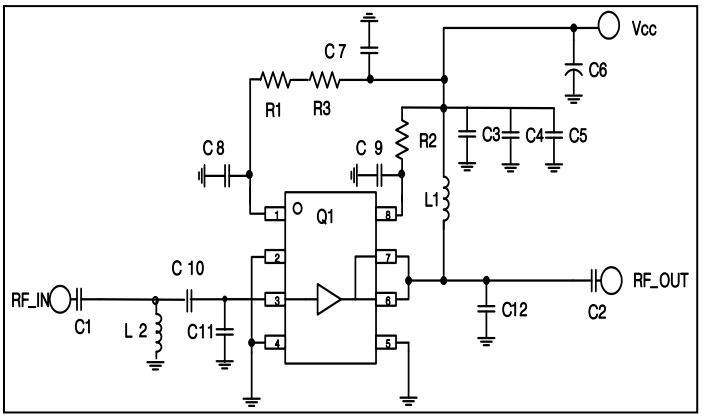

Ref. Des.	Description/ Part Number	Values	Tolerance
C1	1608 CAP	100pF	±5%
C2	1608 CAP	100pF	±5%
C3	1608 CAP	100pF	±5%
C4	1608 CAP	1000pF	±5%
C5	1608 CAP	1uF	±5%
C6	3216 Tantal	10uF	±20%
C7		DNP	
C8		DNP	
C9	1608 CAP	1pF	±5%
C10	1608 CAP	3.9pF	±5%
C11	1608 CAP	10pF	±5%
C12	1608 CAP	8pF	±5%
L1	2520 IND	33nH	±5%
L2	1608 IND	6.8nH	±5%
R1	1608 RES	4.3kohn	±5%
R2	1608 RES	100ohm	±5%
R3	1608 RES	0ohm	±5%
Q1	SOIC-8 PKG	BT331	

Note:

1. PCB: 31mil thick FR4
2. Distance between the center of the shunt Inductor (L2) and the input pin of BT331 is 5.25 mm.
3. Distance between the center of the series cap (C10) and the input pin of BT331 is 3.70 mm.
4. Distance between the center of the shunt cap (C11) and the input pin of BT331 is 1.50 mm.
5. Distance between the center of the shunt cap (C12) and the output pin of BT331 is 8.25 mm.

TITLE	
BT331 Evaluation Board	
(824~894 MHz)	
Drawing Number	Rev.
Date	Drawn By
2011/04/11	YH, Kwon
FILE NAME	SHEET

3.1 BT331_CDMA(824~894MHz) Test Result

SN	Freq [MHz]	Vcc [V]	Icc [mA]	Gain [dB]	OIP3 [dBm](1)	P1dB [dBm]	IRL [dB]	ORL [dB]	NF [dB]
-	824	5	420	20.1	49.5	32.3	21.0	7.2	5.3
-	848	5	420	20.0	47.8	32.0	19.1	8.6	5.3
-	894	5	420	19.8	48.5	31.3	11.6	14.5	5.3

(1) OIP3 was tested @Pout=20dBm/tone (CW) 1MHz tone space

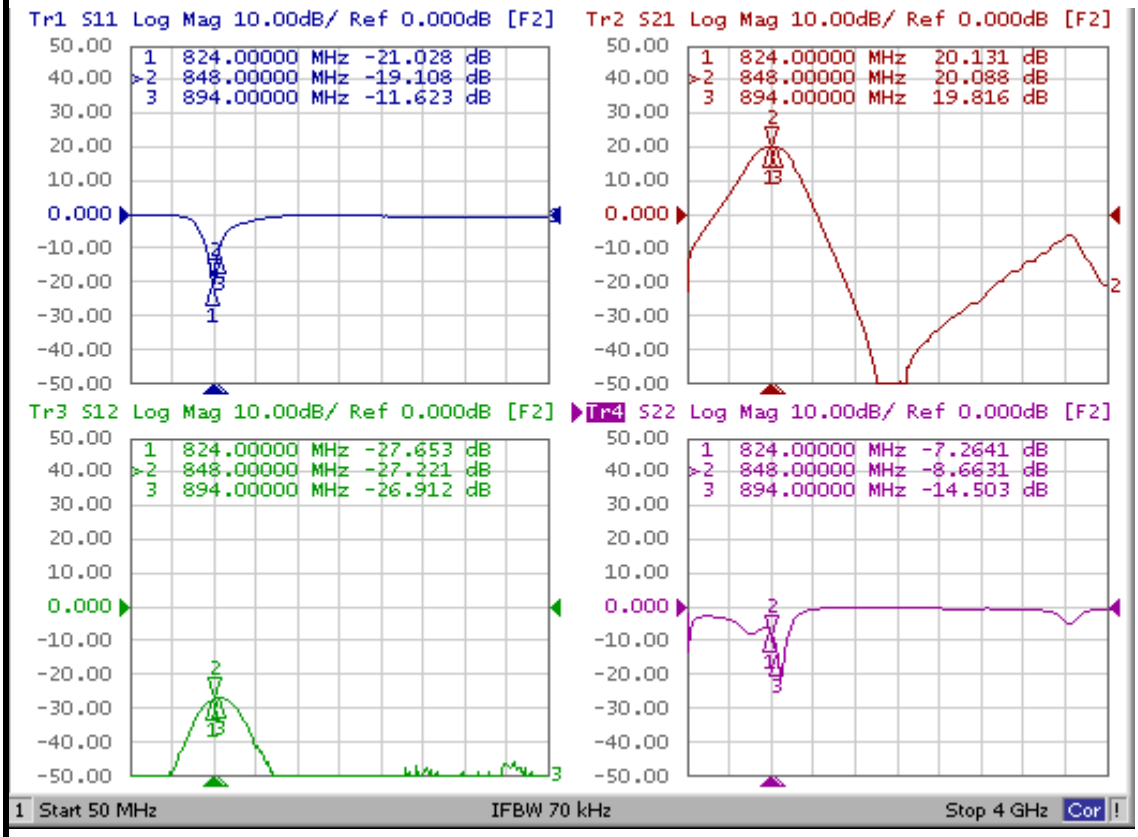

3.2 BT331_CDMA(824~894MHz) ACPR

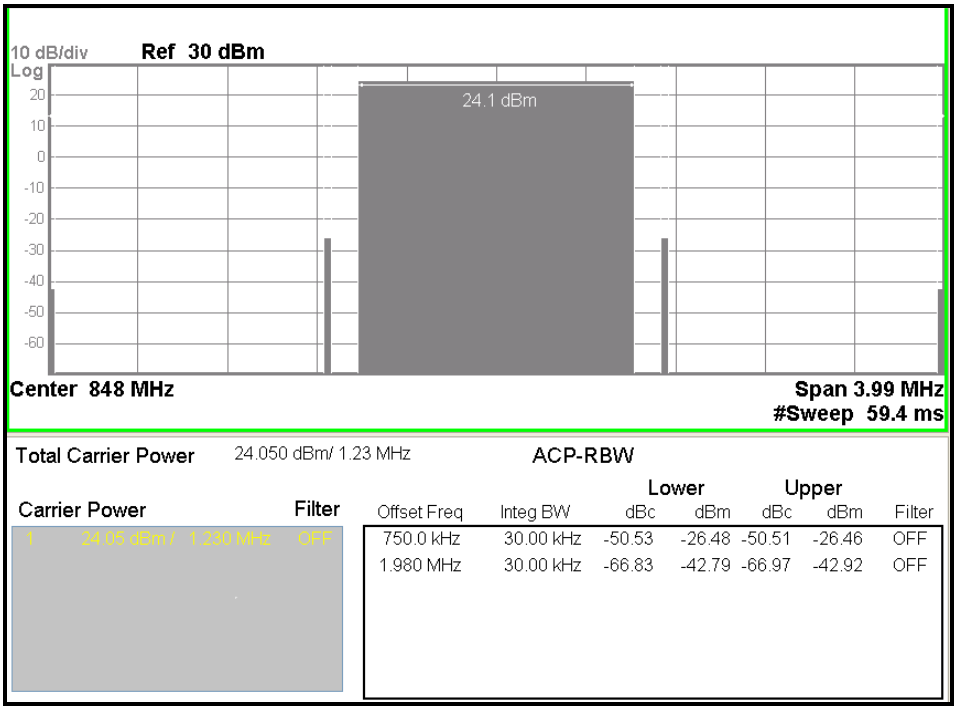

[Test condition]

⇨ **1FA / 750KHz- 50dBc@Output power 24.1dBm**

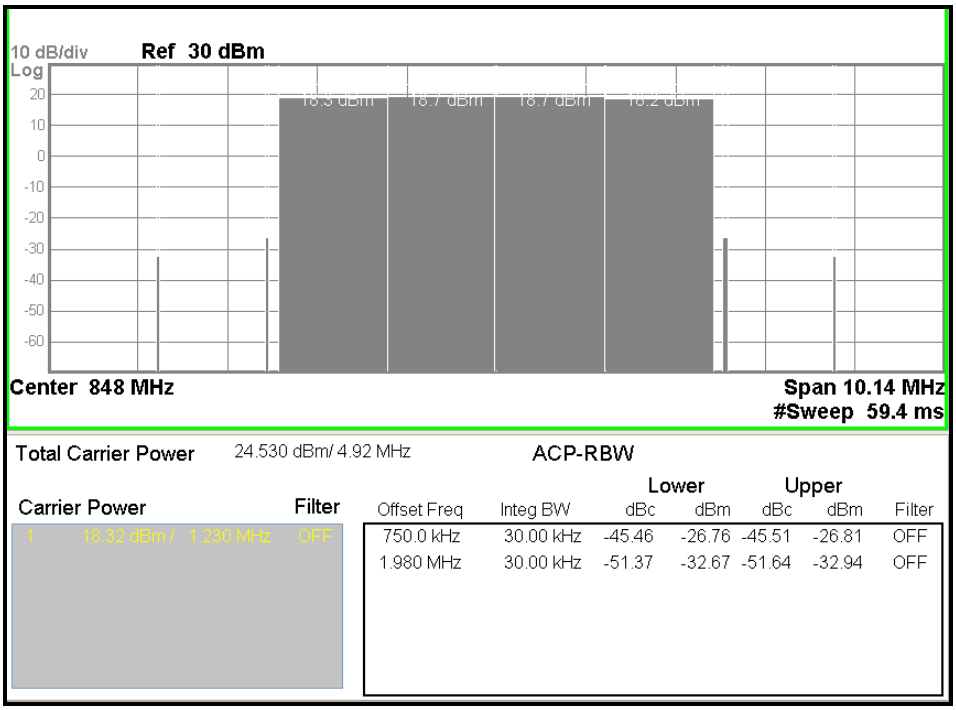

[Test condition]

⇨ **4FA / 750KHz- 45dBc@Output power 24.5dBm**

4. BT331_ 900MHz (Resister Insertion) Application Note

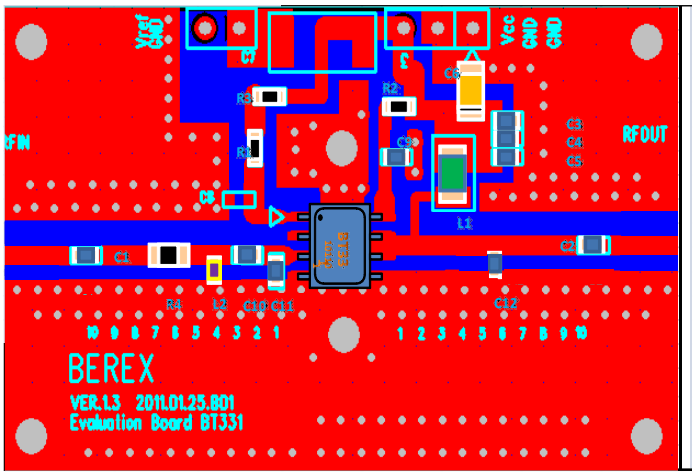

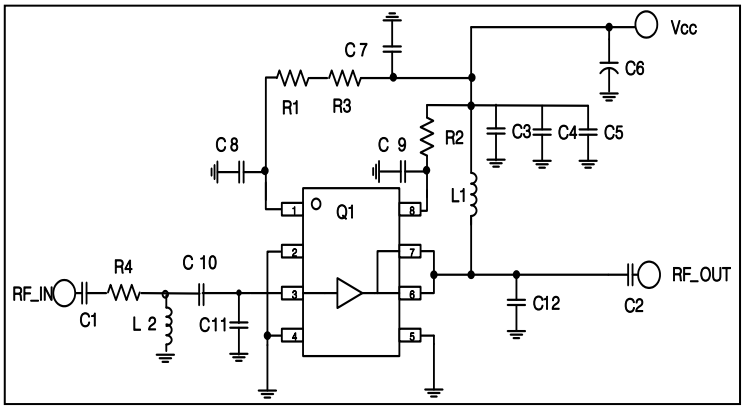

Ref. Des.	Description/ Part Number	Values	Tolerance
C1	1608 CAP	100pF	±5%
C2	1608 CAP	100pF	±5%
C3	1608 CAP	100pF	±5%
C4	1608 CAP	1000pF	±5%
C5	1608 CAP	1uF	±5%
C6	3216 Tantal	10uF	±20%
C7		DNP	
C8		DNP	
C9	1608 CAP	1pF	±5%
C10	1608 CAP	3.3pF	±5%
C11	1608 CAP	10pF	±5%
C12	1608 CAP	8pF	±5%
L1	2520 IND	18nH	±5%
L2	1608 IND	8.2nH	±5%
R1	1608 RES	4.3kohn	±5%
R2	1608 RES	100ohm	±5%
R3	1608 RES	0ohm	±5%
R4	1608 RES	36ohm	±5%
Q1	SOIC-8 PKG	BT331	

Note:

1. PCB: 31mil thick FR4
2. Distance between the center of theshunt Resistance (R4) and the input pin of BT331 is 10.0 mm.
3. Distance between the center of theshunt Inductor (L2) and the input pin of BT331 is 6.45 mm.
4. Distance between the center of the series cap (C10) and the input pin of BT331is3.70 mm.
5..Distance between the center of the shunt cap (C11) and the input pin of BT331 is1.50 mm.
6. Distance between the center of the shunt cap (C12) and the output pin of BT331 is8.25mm

TITLE	
BT331 Evaluation Board	
(900 MHz)	
Drawing Number	Rev.
Date	Drawn By
2011/04/11	YH, Kwon
FILE NAME	SHEET

4.1 BT331_900MHz(Resister Insertion) Test Result

SN	Freq [MHz]	Vcc [V]	Icc [mA]	Gain [dB]	OIP3 [dBm](1)	P1dB [dBm]	IRL [dB]	ORL [dB]	NF [dB]
-	900	5	420	16.9	48	32.3	11.6	14.4	7.2

(1) OIP3 was tested @Pout=20dBm/tone (CW) 1MHz tone space

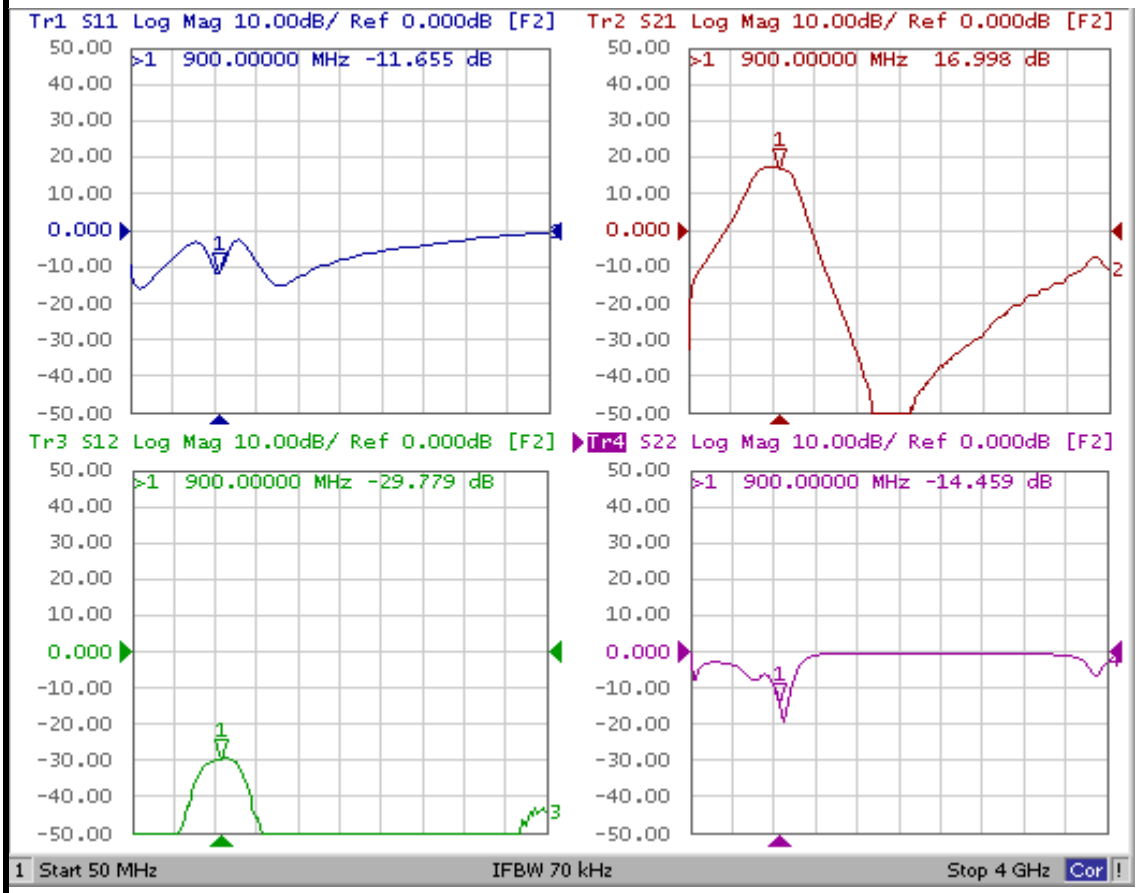

5. BT331_WCMDA(920~960)MHz Application Note

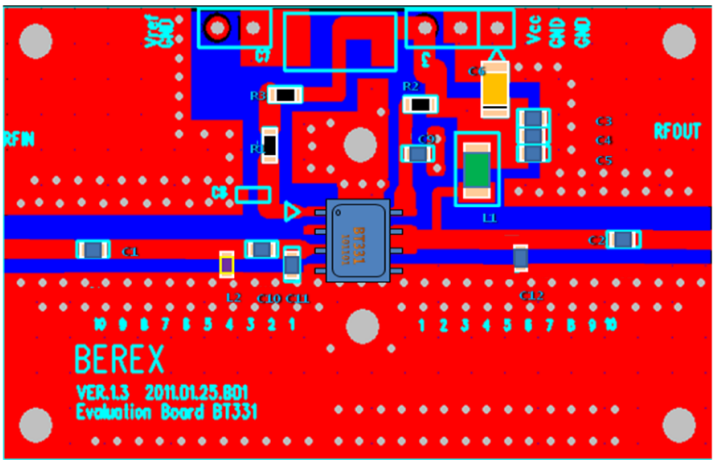

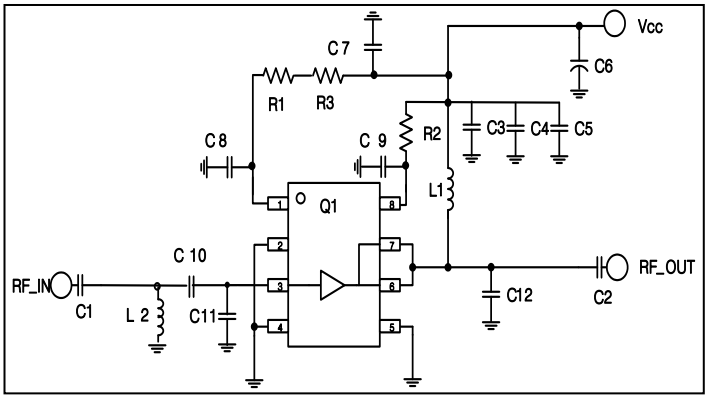

Ref. Des.	Description/ Part Number	Values	Tolerance
C1	1608 CAP	100pF	±5%
C2	1608 CAP	100pF	±5%
C3	1608 CAP	100pF	±5%
C4	1608 CAP	1000pF	±5%
C5	1608 CAP	1uF	±5%
C6	3216 Tantal	10uF	±5%
C7		DNP	
C8		DNP	
C9	1608 CAP	1pF	±5%
C10	1608 CAP	3.3pF	±5%
C11	1608 CAP	10pF	±5%
C12	1608 CAP	7pF	±5%
L1	2520 IND	33nH	±5%
L2	1608 IND	8.2nH	±5%
R1	1608 RES	4.3kohn	±5%
R2	1608 RES	100ohm	±5%
R3	1608 RES	0ohm	±5%
Q1	SOIC-8 PKG	BT331	

Note:

1. PCB: 31mil thick FR4
2. Distance between the center of the shunt Inductor (L2) and the input pin of BT331 is 6.45 mm.
3. Distance between the center of the series cap (C10) and the input pin of BT331 is 3.70 mm.
4. Distance between the center of the shunt cap (C11) and the input pin of BT331 is 1.50 mm.
5. Distance between the center of the shunt cap (C12) and the output pin of BT331 is 8.25 mm

TITLE	
BT331 Evaluation Board	
(920~960 MHz)	
Drawing Number	Rev.
Date	Drawn By
2011/04/11	YH, Kwon
FILE NAME	SHEET

5.1 BT331_WCDMA(920~960MHz) Test Result

SN	Freq [MHz]	Vcc [V]	Icc [mA]	Gain [dB]	OIP3 [dBm](1)	P1dB [dBm]	IRL [dB]	ORL [dB]	NF [dB]
-	920	5	410	19.1	49.0	32.4	22.8	7.9	5.2
-	940	5	410	19.0	47.9	32.3	17.7	9.2	5.2
-	960	5	410	18.9	48.0	31.9	14.2	11.3	5.2

(1) OIP3 was tested @Pout=20dBm/tone (CW) 1MHz tone spaec

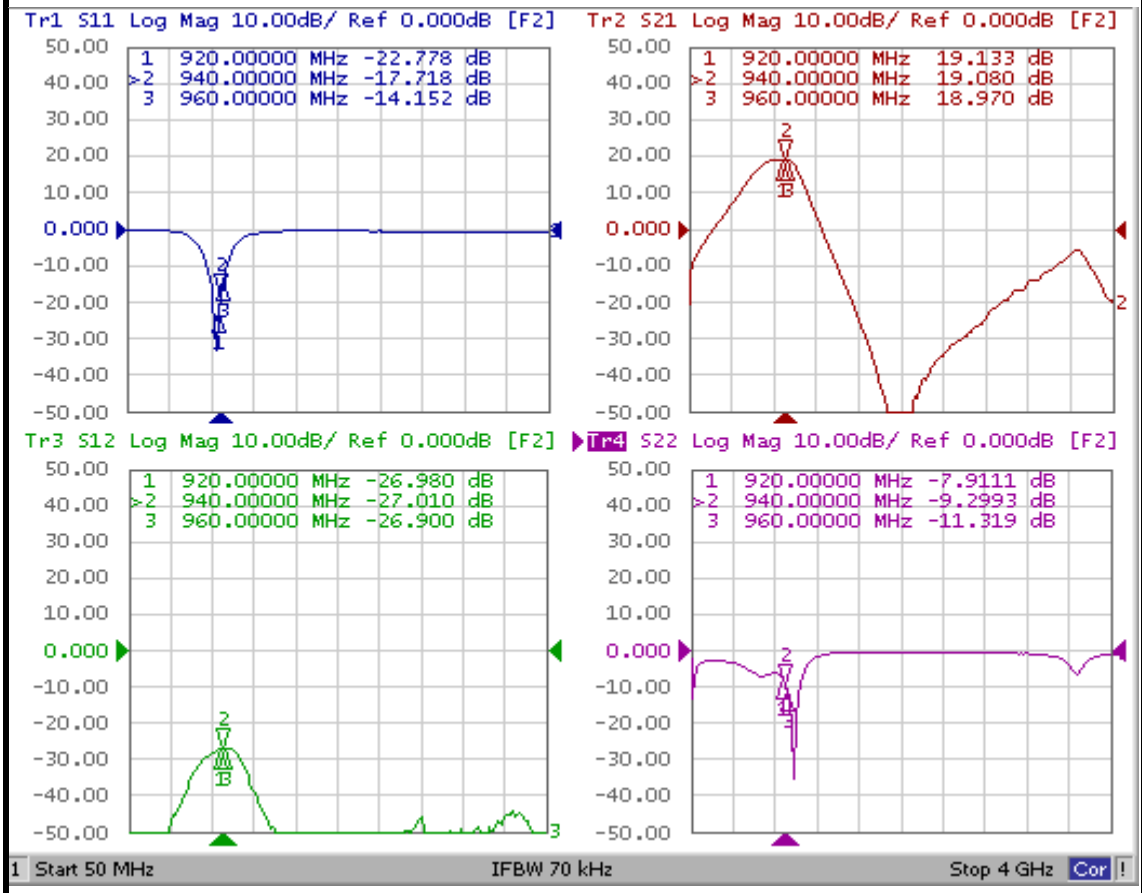

5.2 BT331_WCDMA(920~960MHz) ACLR

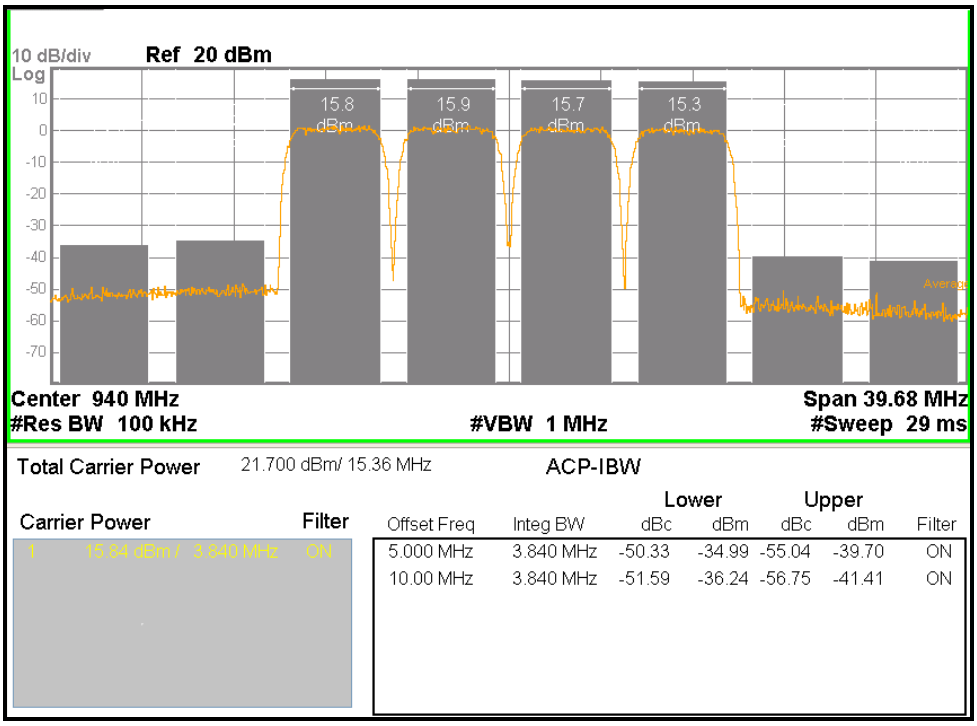

[Test condition]

⇨ **4FA / 5MHz- 50dBc@Output power 21.7dBm**

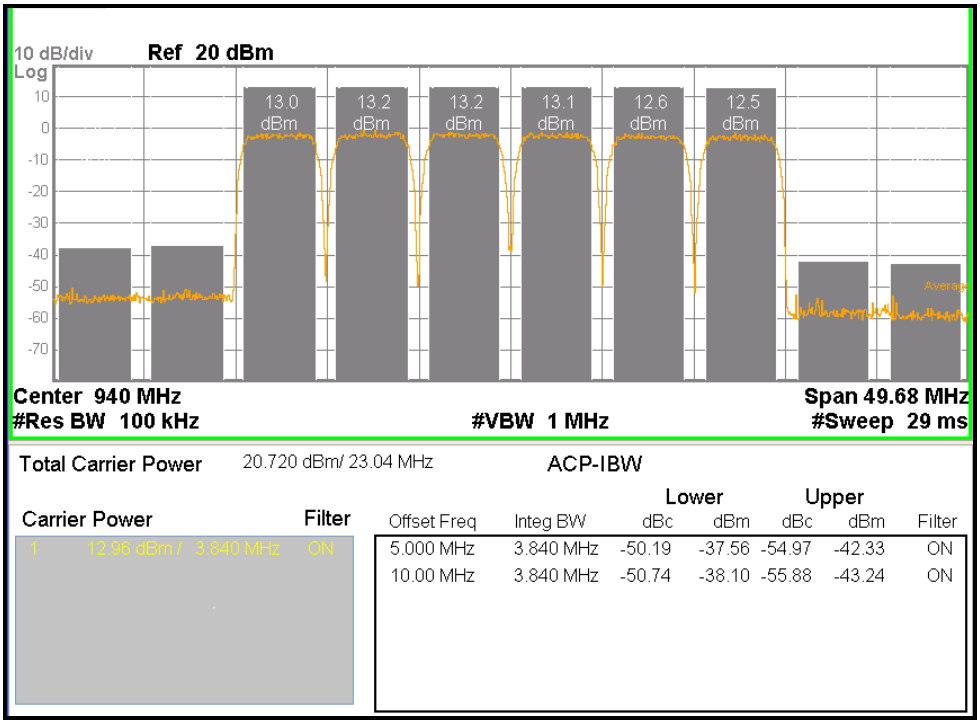

[Test condition]

⇨ **6FA / 5MHz- 50dBc@Output power 20.7dBm**

6. BT331_PCS(1840~1870MHz) Application Note

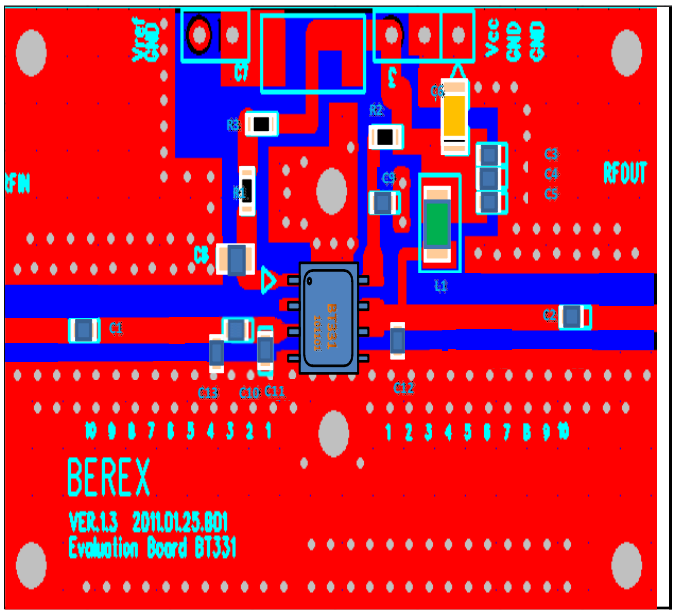

Ref. Des.	Description/ Part Number	Values	Tolerance
C1	1608 CAP	100pF	±5%
C2	1608 CAP	100pF	±5%
C3	1608 CAP	100pF	±5%
C4	1608 CAP	1000pF	±5%
C5	1608 CAP	1uF	±5%
C6	3216 Tantal	10uF	±5%
C7		DNP	
C8	1608 CAP	2pF	±5%
C9	1608 CAP	1.8pF	±5%
C10	1608 CAP	3pF	±5%
C11	1608 CAP	0.5pF	±5%
C12	1608 CAP	2.7pF	±5%
C13	1608 CAP	3pF	±5%
L1	2520 IND	56nH	±5%
R1	1608 RES	4.3kohn	±5%
R2	1608 RES	100ohm	±5%
R3	1608 RES	0ohm	±5%
Q1	SOIC-8 PKG	BT331	

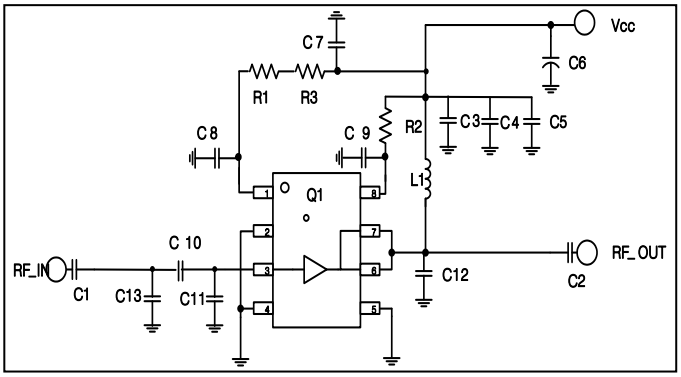

Note:

1. PCB: 31mil thick FR4
2. Distance between the center of the shunt Inductor(C13 and the input pin of BT331 is 5.25mm.
3. Distance between the center of the series cap (C10) and the input pin of BT331 is 3.70 mm.
4. Distance between the center of the shunt cap (C11) and the input pin of BT331 is 1.50 mm.
5. Distance between the center of the shunt cap (C12) and the output pin of BT331 is 2.25 mm

TITLE	
BT331 Evaluation Board	
(1840~1870 MHz)	
Drawing Number	Rev.
Date	Drawn By
2011/04/11	YH, Kwon
FILE NAME	SHEET

6.1 BT331_PCS(1840~1870MHz)Test Result

SN	Freq [MHz]	Vcc [V]	Icc [mA]	Gain [dB]	OIP3 [dBm](1)	P1dB [dBm]	IRL [dB]	ORL [dB]	NF [dB]
-	1840	5	408	14.5	50.8	33.4	17.8	11.5	5.1
-	1855	5	408	14.4	49.7	33.5	16.1	12.3	5.1
-	1870	5	408	14.3	48.8	33.6	13.7	13.4	5.14

(1) OIP3 was tested @Pout=20dBm/tone (CW) 1MHz tone space

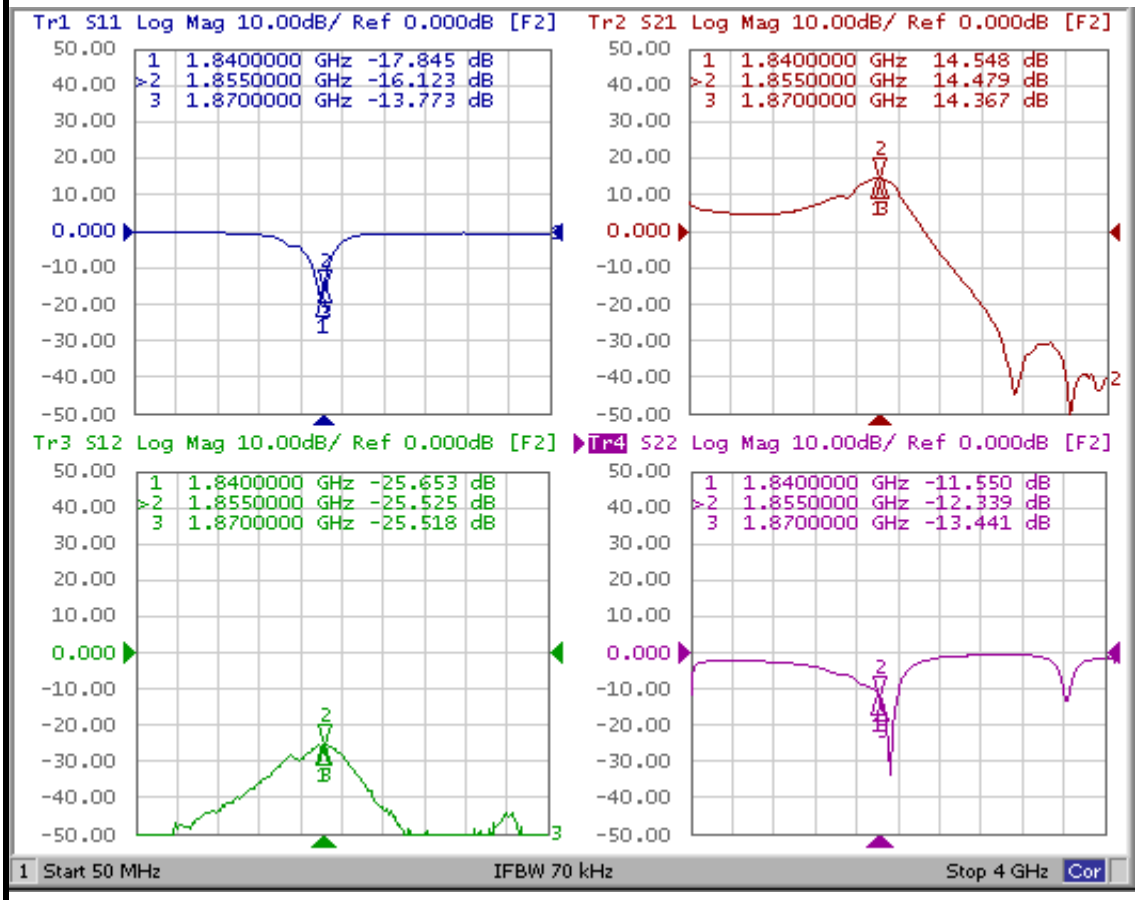

6.2 BT331_PCS(1840~1870MHz) ACPR

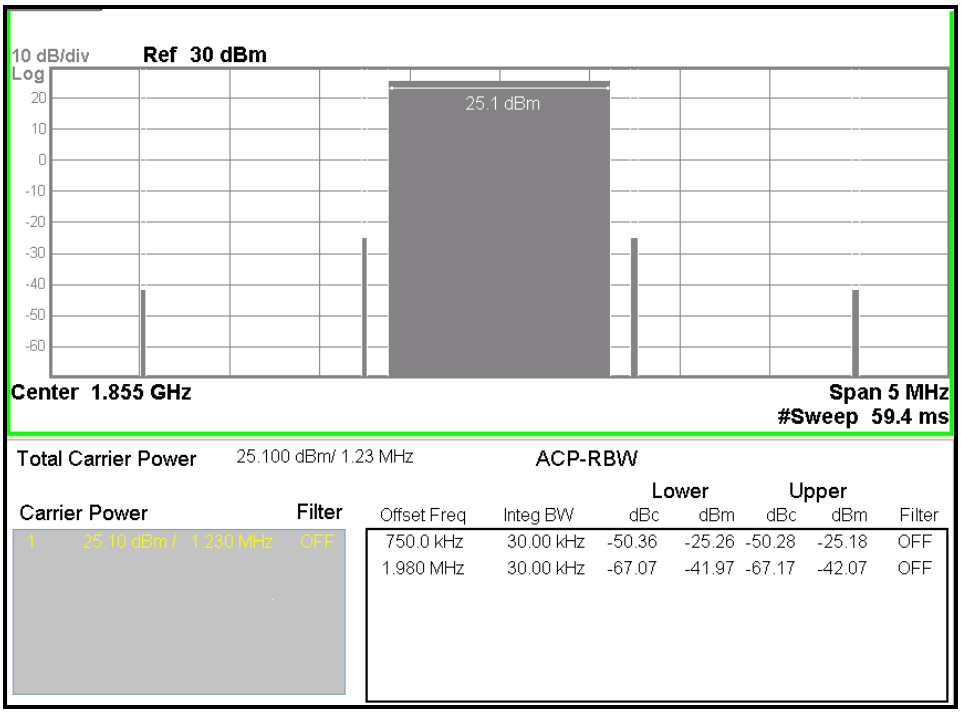

[Test condition]

⇨ **1FA / 750KHz- 50dBc@Output power 25.1dBm**

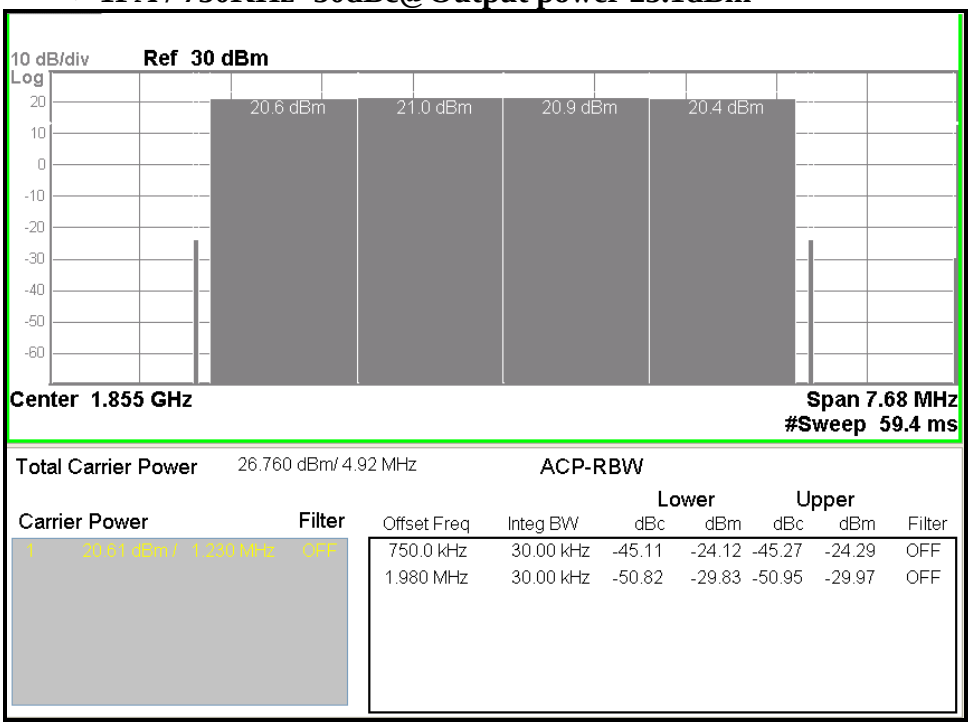

[Test condition]

⇨ **4FA / 750KHz- 45dBc@Output power 26.8dBm**

7. BT331_WCDMA(2110~2170MHz) Application Note

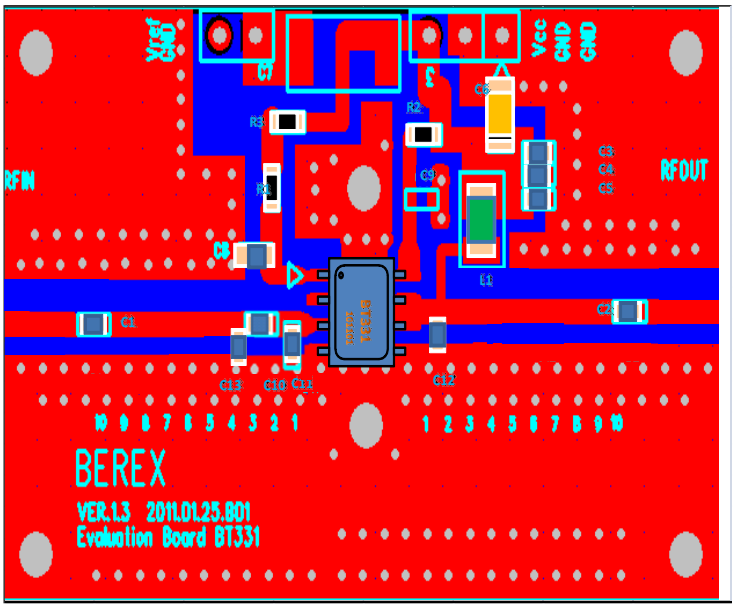

Ref. Des.	Description/ Part Number	Values	Tolerance
C1	1608 CAP	100pF	±5%
C2	1608 CAP	100pF	±5%
C3	1608 CAP	100pF	±5%
C4	1608 CAP	1000pF	±5%
C5	1608 CAP	1uF	±5%
C6	3216 Tantal	10uF	±5%
C7		DNP	
C8	1608 CAP	5pF	±5%
C9		DNP	
C10	1608 CAP	1.8pF	±5%
C11	1608 CAP	0.5pF	±5%
C12	1608 CAP	2pF	±5%
C13	1608 CAP	2pF	±5%
L1	2520 IND	22nH	±5%
R1	1608 RES	5.6kohn	±5%
R2	1608 RES	100ohm	±5%
R3	1608 RES	0ohm	±5%
Q1	SOIC-8 PKG	BT331	

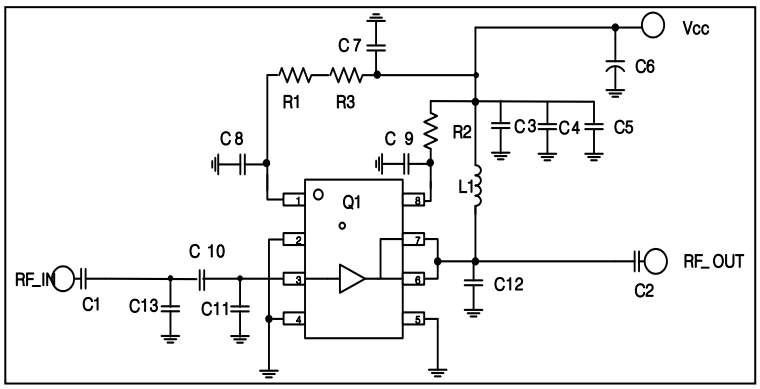

Note:

1. PCB: 31mil thick FR4
2. Distance between the center of the shunt Inductor (C13) and the input pin of BT331 is 5.25 mm.
3. Distance between the center of the series cap (C10) and the input pin of BT331 is 3.70 mm.
4. Distance between the center of the shunt cap (C11) and the input pin of BT331 is 1.50 mm.
5. Distance between the center of the shunt cap (C12) and the output pin of BT331 is 2.25 mm.

TITLE	
BT331 Evaluation Board	
(2110~2170 MHz)	
Drawing Number	Rev.
Date	Drawn By
2011/04/11	YH, Kwon
FILE NAME	SHEET

7.1 BT331_ WCDMA(2130~2170MHz) Test Result

SN	Freq [MHz]	Vcc [V]	Icc [mA]	Gain [dB]	OIP3 [dBm](1)	P1dB [dBm]	IRL [dB]	ORL [dB]	NF [dB]
-	2110	5	405	13.2	50.5	32.5	12.5	11.8	5.2
-	2140	5	405	13.4	50	32.4	17.0	13	5.2
-	2170	5	405	13.4	48	32	28.3	15.1	5.2

(1) OIP3 was tested @Pout=20dBm/tone (CW) 1MHz tone space

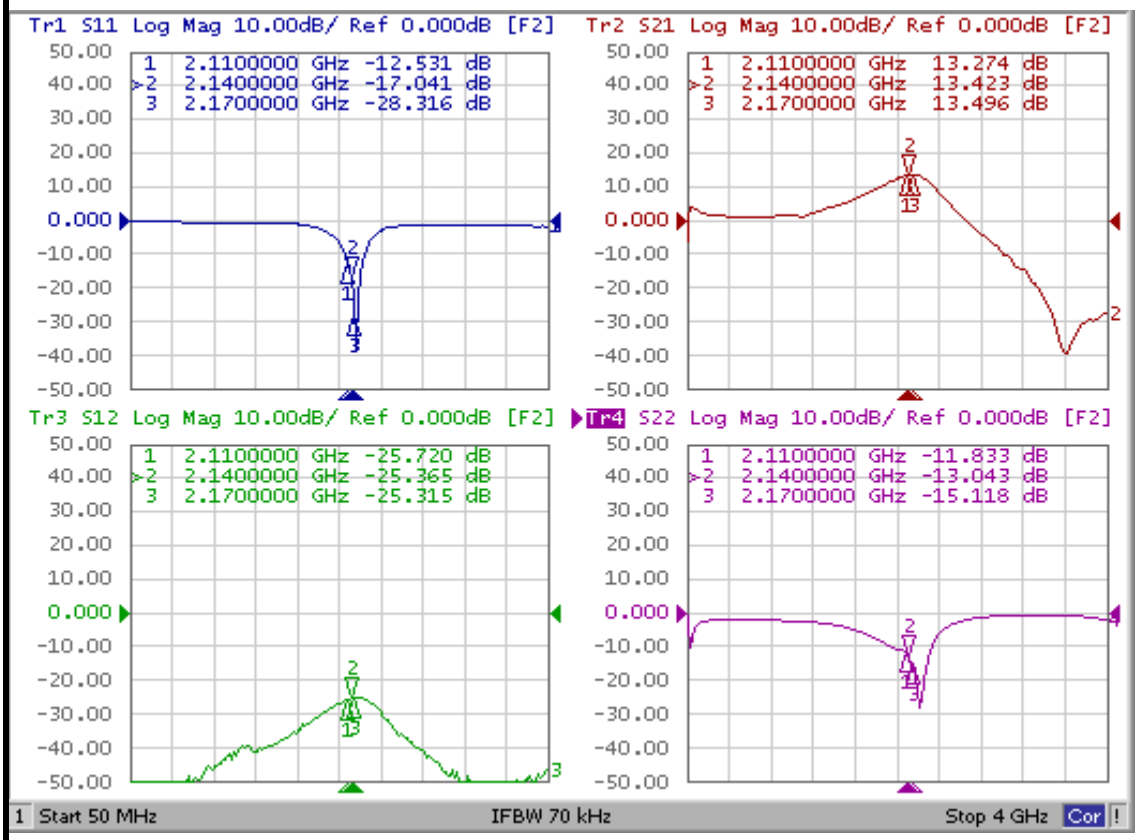

7.2 BT331_ WCDMA(2110~2170MHz) ACLR

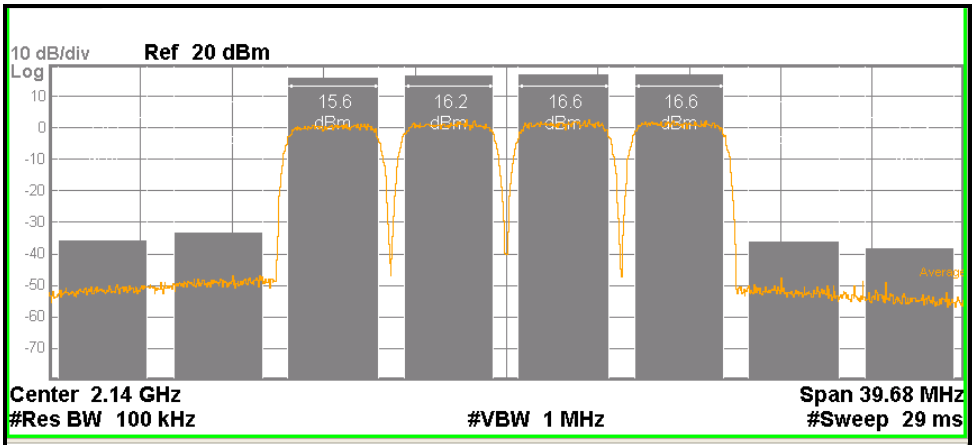

Total Carrier Power 22.280 dBm/ 15.36 MHz

ACP-IBW

Carrier Power	Filter
1 15.58 dBm / 3.840 MHz	ON

Offset Freq	Integ BW	Lower dBc	Lower dBm	Upper dBc	Upper dBm	Filter
5.000 MHz	3.840 MHz	-50.06	-33.51	-52.94	-36.39	ON
10.00 MHz	3.840 MHz	-52.48	-35.92	-55.14	-38.58	ON

[Test condition]

⇨ **4FA / 5MHz- 50dBc@Output power 22.3dBm**

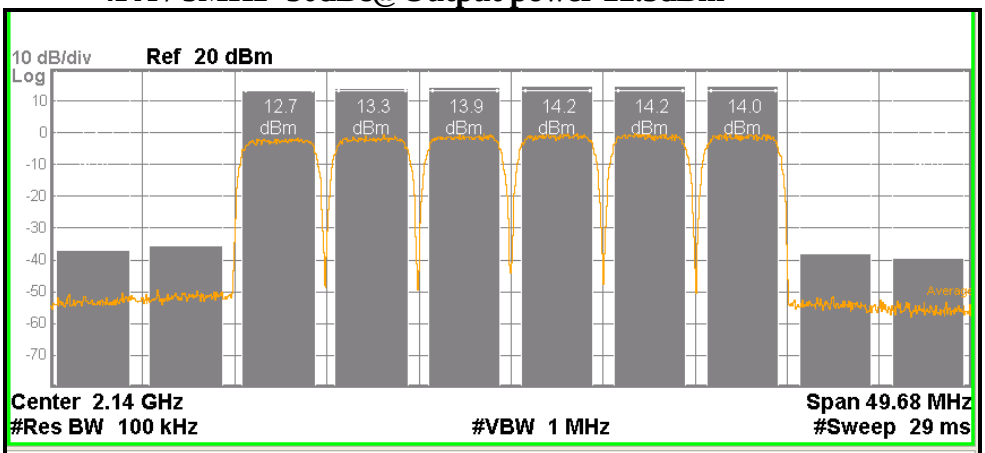

Total Carrier Power 21.540 dBm/ 23.04 MHz

ACP-IBW

Carrier Power	Filter
1 12.74 dBm / 3.840 MHz	ON

Offset Freq	Integ BW	Lower dBc	Lower dBm	Upper dBc	Upper dBm	Filter
5.000 MHz	3.840 MHz	-50.15	-35.94	-52.68	-38.48	ON
10.00 MHz	3.840 MHz	-51.70	-37.49	-54.12	-39.91	ON

[Test condition]

⇨ **6FA / 5MHz- 50dBc@Output power 21.5dBm**

8. BT331_ LTE_2600MHz Application Note

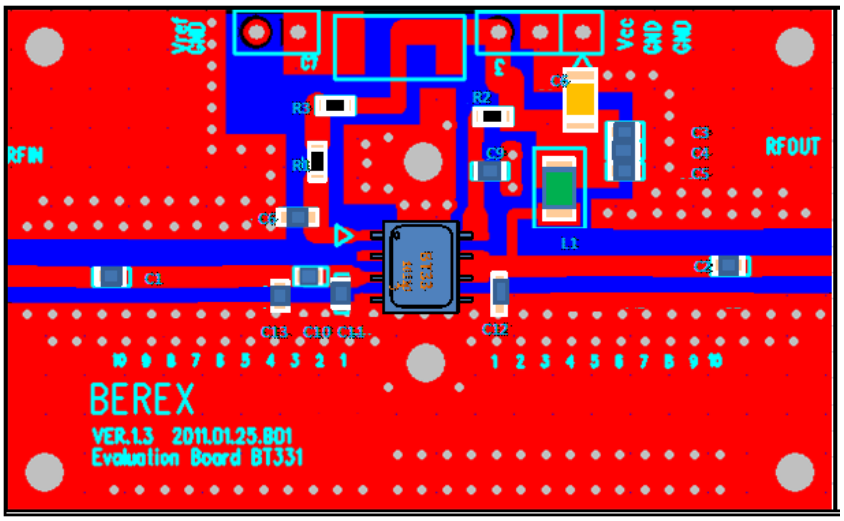

Ref. Des.	Description/ Part Number	Values	Vendor
C1	0603 CAP	100pF	Samsung
C2	0603 CAP	100pF	Samsung
C3	0603 CAP	100pF	Samsung
C4	0603 CAP	1nF	Samsung
C5	0603 CAP	1uF	Samsung
C6	A3216 CAP	10uF	AVX
C7		NC	
C8	0603 CAP	5pF	Samsung
C9	0603 CAP	2.5pF	Samsung
C10	0603 CAP	1pF	Samsung
C11	0603 CAP	0.5pF	Samsung
C12	0603 CAP	1.8pF	Samsung
C13	0603 CAP	1pF	Samsung
L1	1008 IND	5.7nH	Coilcraft
R1	0603RES	5.6Kohm	Samsung
R2	0603RES	100ohm	Samsung
U1	SOIC8	BT331	BEREX

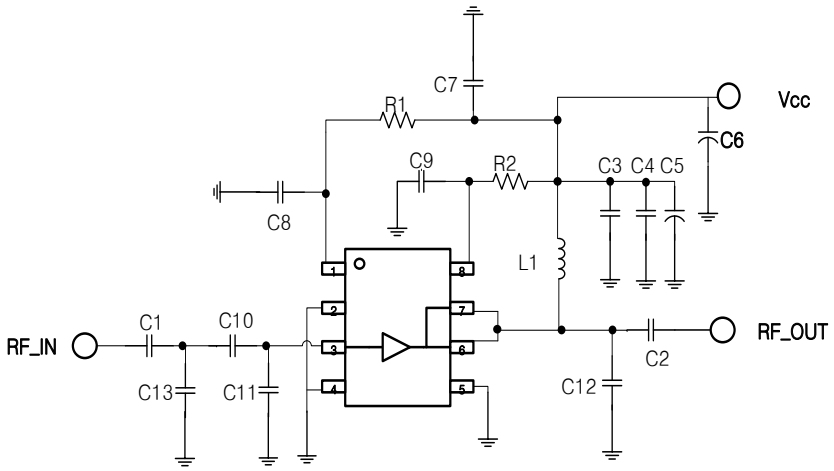

Note.
1. PCB: 31mil thick FR4
2. Distance between the center of the shunt cap.(C13) and the input pin of BT331 _ ***5.25 mm***.
3. Distance between the center of the series cap.(C10) and the input pin of BT331 _ ***2.8mm.***
4. Distance between the center of the shunt cap.(C11) and the input pin of BT331 _ ***1.5 mm***.
5. Distance between the center of the shunt cap.(C12) and the output pin of BT331 _ ***1.5 mm***

TITLE	
BT301 Evaluation Board	
(2600 MHz)	
Drawing Number	Rev.
Date	Drawn By
FILE NAME	SHEET

8.1 BT331_LTE_2600MHz Test Result

SN	Freq [MHz]	Vcc [V]	Icc [mA]	Gain [dB]	OIP3 [dBm](1)	P1dB [dBm]	IRL [dB]	ORL [dB]	NF [dB]
-	2600	5	403	12.2	47	31.3	-15.8	-15.8	5.5

(1) OIP3_tested @Pout=20dBm/tone 1MHz offset

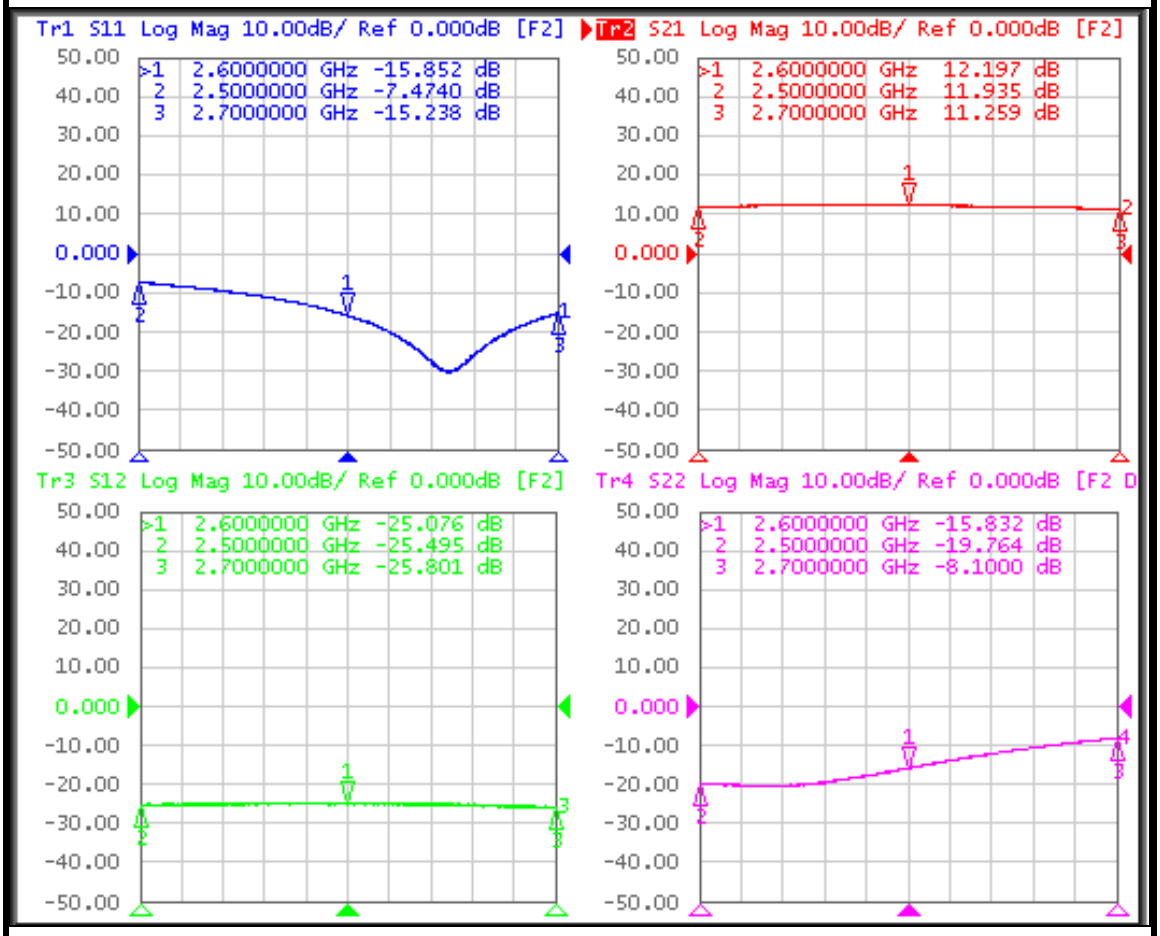

8.2 BT331 LTE_20MHz_ ACLR Test Result

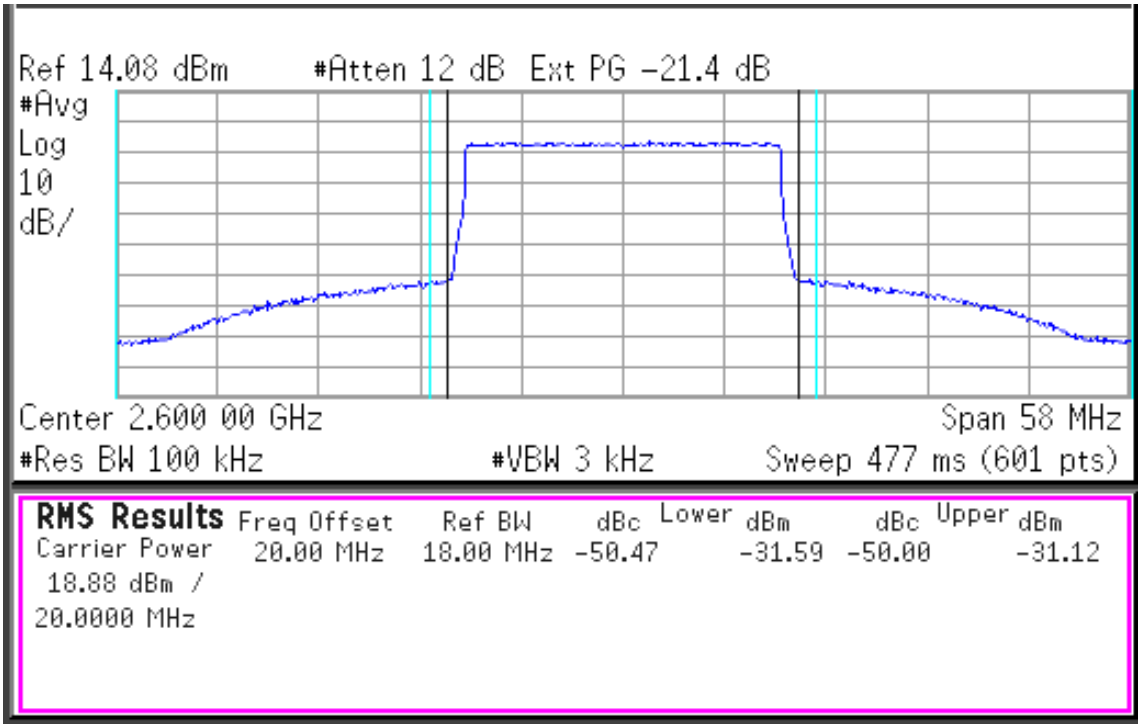

[Test condition]

⇨ **LTE_FDD_TM 3p1_20MHz -50dBc @Output power 18.88dBm**