Evaluation Kit Operation Manual Rev.3.1

For DSA (Digital Step Attenuator) / DVGA (Digital Variable Gain Amplifier)

Table of contents

2. Evaluation Kit Information

The Evaluation Kit should contain

1. BeRex DSA/DVGA RF Board (Evaluation Board – EVB)
2. Evaluation Control Interface board (EVCI)
3. USB Cable
4. GUI & FTDI USB Driver (Web download)
   BeRex GUI Download : Link1
   FTDI USB Driver : Link2

1. Introduction

This operation manual describes how to control the DSA (Digital Step Attenuator) / DVGA (Digital Variable Gain Amplifier) Evaluation board (EVB) using an Evaluation Control Interface board (EVCI hereafter EVCI). This Kit can be used to test and evaluate the various RF performance of the DSA/DVGA and is ideal for the functionality of the DSA and hardware development for RF system.

The DSA/DVGA Evaluation Board (EVB) is based on a combination of RF board and integrated Evaluation interface board with FT232RL(FTDI Chip) and provides access to the USB ports as well as the SPI communication. This board was designed as a validation platform with maximum functionality. Where possible we've also designed for RF measurement environmental diversity, but the primary goal of this system was control for DSA/DVGA with EVCI board.

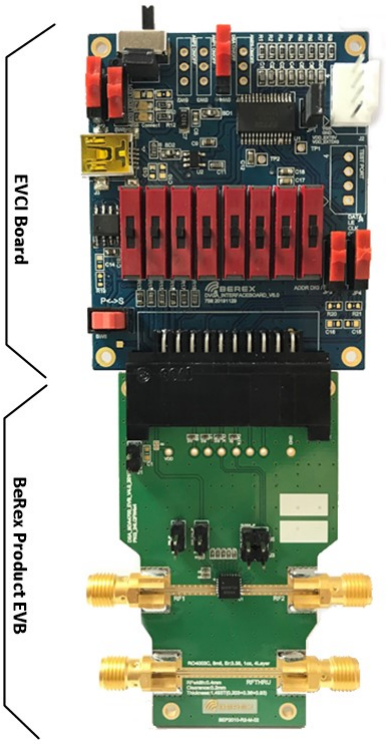

< Figure 1. The Evaluation Board Test Kit >

3. Evaluation Control Interface Board (EVCI) Overview

EVCI board allows the user to send SPI commands to the device under test by using a PC running the Windows™ operating system. The EVCI Board is responsible for interpreting commands from the USB and supplying the EVB with the appropriate control data on the 20-pin connector. And It supports direct parallel mode and serial mode at the same time, and provides the option of selecting External power and USB power according to user's environment.

< Figure 2. The EVCI Board >

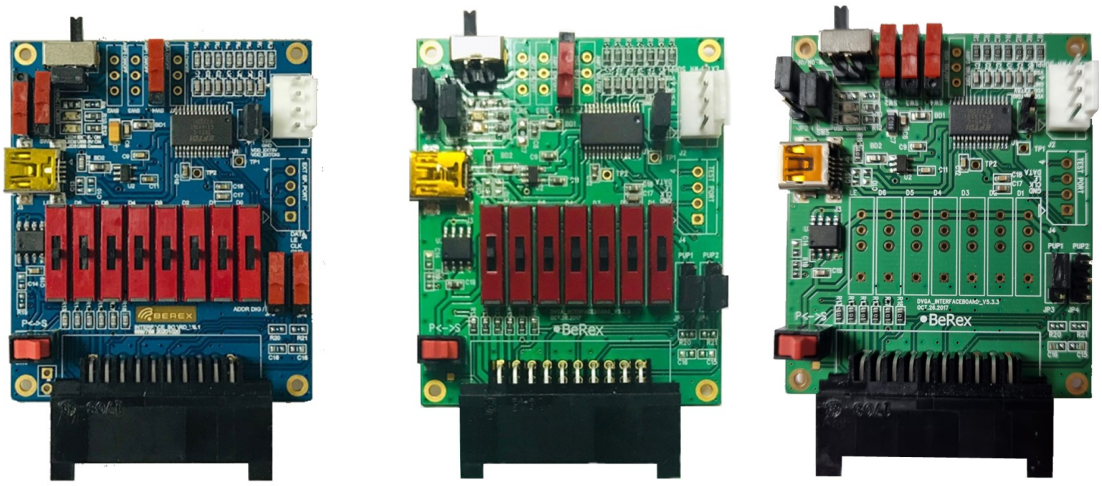

< EVCI V6.1 >
Serial / Parallel

< EVCI V5.3.3 >
Serial / Parallel

< EVCI V5.3.3 >
Serial only

Table 1. BeRex Products supported by EVCI Board

Part Number	Part Description	Attenuation Bit	Support Interface Type
BDA4601	DSA	6 Bit	Latched Parallel, Direct Parallel, Serial
BDA4620	DSA	6 Bit	Latched Parallel, Direct Parallel, Serial
BDA4630	DSA	6 Bit	Latched Parallel, Direct Parallel, Serial Addressable
BDA4700	DSA	7 Bit	Latched Parallel, Direct Parallel, Serial
BDA4710/BDA4730	DSA	7 Bit	Latched Parallel, Direct Parallel, Serial Addressable
BVA303/BVA303B/BVA303C	DVGA	6 Bit	Latched Parallel, Direct Parallel, Serial
BVA304/BVA304B/BVA304C	DVGA	6 Bit	Latched Parallel, Direct Parallel, Serial
BVA305/BVA305B/BVA305C	DVGA	6 Bit	Latched Parallel, Direct Parallel, Serial
BVA518/BVA518B	DVGA	6 Bit	Latched Parallel, Direct Parallel, Serial
BVA2140/BVA2140B	DVGA	6 Bit	Serial only
BVA3143/BVA3144/BVA3153	DVGA	7 Bit	Serial only
BVA7202/BVA7212/BVA7242	DVGA	7 Bit	Serial only
BVA1761/BVA1762	DVGA	7 Bit	Serial Addressable only
BVA2761/BVA2762	DVGA	7 Bit	Serial Addressable only

3. Evaluation Control Interface Board (EVCI) Overview

The Evaluation Control Interface (EVCI) Board is an evaluation platform based on the FT232RL UART IC. EVCI support the USB2.0 interface and the Direct Parallel mode with SP3T switch manually and supports the Functional option for USB power supply or user direct power supply.

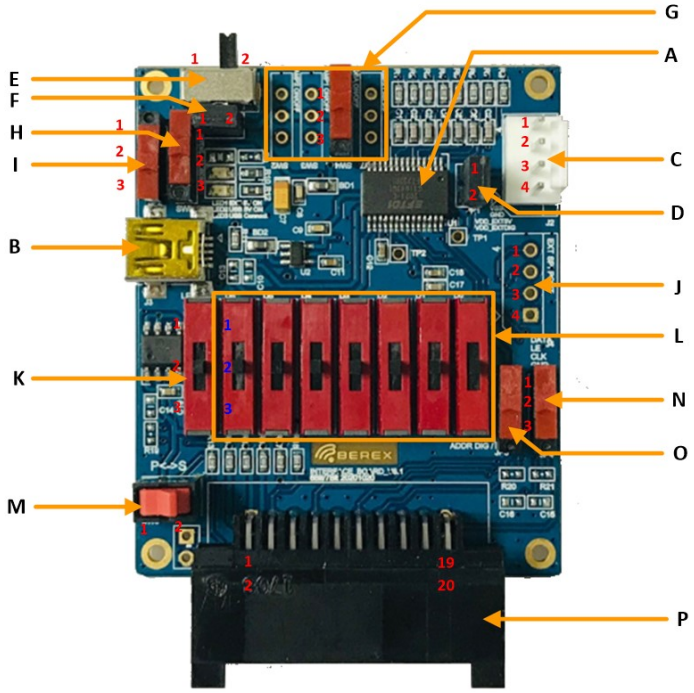

< Figure 3. Description of EVCI Board >

A. FTDI UART IC : FT232RL
Main DSA / DVGA Control IC

B. Mini USB Connector Port
Connect with the PC to control BeRex GUI
Power supply input for DSA/DVGA (VDD_USB, **Optional**)
Power supply input of EVCI board.

C. EXT Power Supply Connector **(optional)**
External power supply input (VDD_EXT)
Pin 1 : VDD for Digital circuits (3.3 to 5Vdc)
Pin 2 : VDD for DSA/DVGA (typical 5Vdc)
Pin 3 : Ground
Pin 4 : VSS when using Negative Voltage (Default N/C)
Default Not used

D. EXT Power Supply merge Jumper
Connect Pin 1-2 when want to use two External power supply sources (Pin1 and Pin2 of C) as one input.
Default Not connected.

E. Main Power Supply On/Off switch
Select 1 : VDD input Off of VDD_USB (from **B**) or VDD_EXT (from **C**) for DSA/DVGA
Select 2 : VDD input On of VDD_USB or VDD_EXT
Default value : Select 1 (VDD OFF)
Basically Main VDD of DSA/DVGA is directly supplied at the DSA/DVGA EVB.

F. Main Current measuring Port
Connect Pin 1-2 when use the Switch **E** selected to pin 2.

G. DSA/DVGA VDD On/Off Switch
These switches are used when switch **E** is ON.
Default Not used.
These are used to turn On/Off the VDD of each individual stage of DVGA/DSA EVB

H. VDD Selection Switch of EVCI Digital part
Connected Pin 1-2 : Selected EXT Power Supply from **C** (Pin 1 of **C**)
Connected Pin 2-3 : Selected VDD from USB port from B. Default value.

I. Main VDD Selection Switch for DSA/DVGA RF EVB
Not used when Main VDD of DSA/DVGA is supplied directly at the DSA/DVGA EVB
Connected Pin 1-2 : Selected EXT Power Supply from **C** (Pin 2 of **C**)
Connected Pin 2-3 : Selected VDD for USB Port from B

J. SPI Data Test port
Pin 1 : DATA
Pin 2 : LE
Pin 3 : Clock
Pin 4 : Ground

K. LE Control Switch
Selected Pin 1 : LE High
Direct Parallel mode
Selected Pin 2 : LE inputted by FT232RL (GUI Control)
Serial / Latched Parallel mode
Selected Pin 3 : LE Low (Ground)

L. Parallel Data Control Switch (Direct Parallel mode)
Selected Pin 1 : Parallel Data High
Selected Pin 2 : LE inputted by FT232RL (GUI Control)
Selected Pin 3 : Parallel Data Low

M. Parallel/Serial Selection Switch
Selected Pin 1 : Parallel Mode
Selected Pin 2 : Serial Mode

3. Evaluation Control Interface Board (EVCI) Overview

N. DSA PUP2 Setting Switch

Connected Pin 1-2 : High

Connected pin 2-3 : Low

More details : See the page 11

BeRex Products with PUP function : BDA4601, BVA30x(B), BVA518(B), BVA2140(B)

O. DSA PUP1 Setting / Addressable VDD Setting Switch

When used as PUP1 setting, same with **N**.

Connected Pin 1-2 : High

Connected pin 2-3 : Low

When used as Addressable VDD Setting switch. (Serial Address mode)

Connected Pin 1-2 : Supplied 3V to addressable Connector of DSA/DVGA EVB

Connected Pin 2-3 : Not used

BeRex Products with Serial addressable : BDA4630, BDA4710/4730, BVA176x, BVA276x

More details : See the page 11

P. Connector to Connect with DSA/DVGA RF EVB

- 20pin Receptacle Connector
- Pin map is as follows;

Table 2. EVCI 20pin Receptacle Connector Pin map

Pin Number	Pin Name	Pin Description
1	VDD_AMP1	Amplifier1 VDD of DVGA input when VDD supplied by EVCI (Default Not used)
2	VDD_AMP2	Amplifier2 VDD of DVGA input when VDD supplied by EVCI (Default Not used)
3	VSS	VSS input when VSS supplied by EVCI (Default Not used)
4	VDD_DSA	DSA VDD of DSA/DVGA input when VDD supplied by EVCI (Default Not used)
5	P/S	Parallel mode / Serial mode selection Signal input. Low is Parallel, High is Serial mode
6	VDD_AMP3	Amplifier3 VDD of DVGA input when VDD supplied by EVCI (Default Not used)
7	LE	Latch Enable Signal input
8	NC	Not connected
9	CLOCK / C8	SPI Clock Signal input @ serial mode, Attenuation 8dB Signal input @ Parallel mode
10	C4	Attenuation 4dB Signal input @ Parallel mode
11	DATA / C16	SPI DATA Signal input @ serial mode, Attenuation 16dB Signal input @ Parallel mode
12	C2	Attenuation 2dB Signal input @ Parallel mode
13	PUP1 / VDD for ADDR Set	Power-Up State Selection Bit1 @ BDA4601 only VDD(3V) setting input for Addressable bits @ Serial addressable mode
14	C1	Attenuation 1dB Signal input @ Parallel mode
15	PUP2	Power-Up State Selection Bit2 @ BDA4601 only
16	C0.5	Attenuation 0.5dB Signal input @ Parallel mode
17	NC	Not connected
18	C0.25	Attenuation 0.25dB Signal input @ Parallel mode
19	GND	Ground
20	GND	Ground

4. DSA/DVGA EVB Default Setting with EVCI Board

4-1. DSA/DVGA Environment Configuration

Evaluation board Kit Introduction

BeRex all DSA and DVGA product Evaluation Kit is made up of a combination of an RF board and EVCI board is assembled with SP3T switches(D1~D6,LE), SP2T mechanical switch (P/S), and several header & switch.
Users can freely select EXT VDD or USB5V to supply power to the DSA/DVGA EVB. But it is based on directly supplying Main VDD from DSA/DVGA each Evaluation Board (EVB).
In this chapter, recommendation setting of EVCI and each DSA/DVGA EVB are explained in a more understandable way.

Evaluation Board Programming Using USB Interface

In order to evaluate the DSA/DVGA performance, the Application Software (GUI, FTDI UART driver) has to be installed on your computer. And The DSA application software GUI supports Latched Parallel and Serial modes. This software can be downloaded from BeRex's website.

4-2. DSA Setting with BDA4620 / BVA4601 EVB Kit

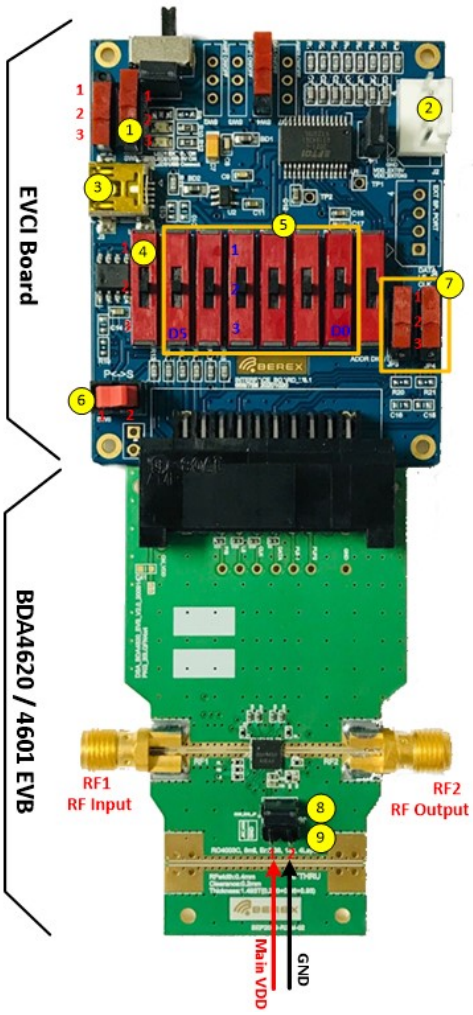

< Figure 4. BDA4620 EVB Kit >

1. VDD Selection Switch of EVCI Board
   Connected pin 1-2 : Not used,
   VDD supplied for EXT power supply from 2
   Connected pin 2-3 : VDD supplied from USB port 3
   Must be pin 2-3 connected

2. EXT Power Supply Connector
   Do Not use

3. Mini USB Connector Port
   Connect with PC to control the GUI and supply the VDD of EVCI Board

4. LE Control Switch
   Direct Parallel Mode : Switch to Pin 1
   Latched Parallel Mode : Switch to Pin 2
   Serial Mode : Switch to Pin 2

5. Parallel Data Control Switch (6bit, D0 ~ D5)
   Pin 1 : High, Pin 3 : Low
   D0 : 0.5dB, D1 : 1dB, D2 : 2dB, D3 : 4dB, D4 : 8dB, D5 : 16dB
   See the page 11 for more details

6. Parallel / Serial Selection Switch
   Parallel Mode : Switch to Pin 1
   Serial Mode : Switch to Pin 2

7. PUP1 / PUP2 Setting Switch
   Connected Pin 1-2: High
   Connected Pin 2-3 : Low
   Products with PUP function :
   BDA4601, BVA30x(B), BVA518(B), BVA2140(B)
   Don't be used in BDA4620 (BDA4620 don't need PUP function)

All other switches and Connectors are not used.
So, no matter how you control this switch.

8. P/S Pin Current Measuring Port
   Connect Jumper (Default),
   If necessary connect the Current meter to measure the Current

9. Main Power Supply Connector for BDA4620 EVB
   Pin 1 : VDD (3V to 5V)
   Pin 2 : Ground

4. DSA/DVGA EVB Default Setting with EVCI Board

4-3. DSA Setting with BDA4700 EVB Kit

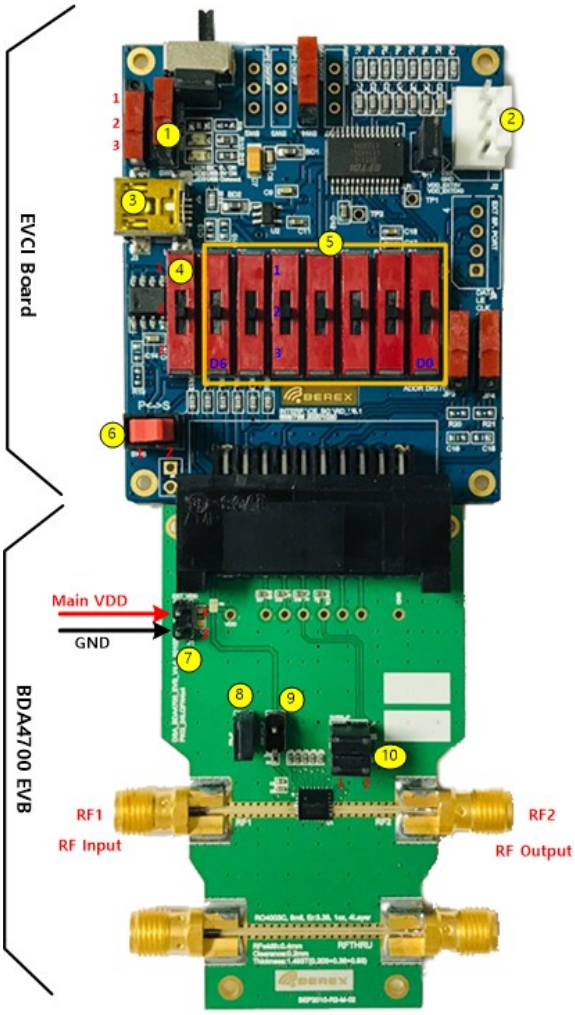

< Figure 5. BDA4700 EVB Kit >

1. VDD Selection Switch of EVCI Board
   Connected pin 1-2 : Not used,
   VDD supplied for EXT power supply from 2
   Connected pin 2-3 : VDD supplied from USB port 3
   Must be pin 2-3 connected

2. EXT Power Supply Connector
   Do Not use

3. Mini USB Connector Port
   Connect with PC to control the GUI and supply the VDD of EVCI Board

4. LE Control Switch
   Direct Parallel Mode : Switch to Pin 1
   Latched Parallel Mode : Switch to Pin 2
   Serial Mode : Switch to Pin 2

5. Parallel Data Control Switch (7bit, D0 ~ D6)
   Pin 1 : High, Pin 3 : Low
   D0 : 0.25dB, D1 : 0.5dB, D2 : 1dB, D3 : 2dB, D4 : 4dB
   D5 : 8dB, D6 : 16dB
   See the **page 11** for more details

6. Parallel / Serial Selection Switch
   Parallel Mode : Switch to Pin 1
   Serial Mode : Switch to Pin 2

All other switches and Connectors are not used.
So, no matter how you control this switch.

7. Main Power Supply Connector for BDA4700 EVB
   Pin 1 : VDD (3V to 5V)
   Pin 2 : Ground

8. P/S Pin Current Measuring Port
   Connect Jumper (Default),
   If necessary connect the Current meter to measure the Current

9. BDA4700 Main Current Measuring Port
   Connect Jumper (Default),
   If necessary connect the Current meter to measure the Current

10. SPI Clock and Data pin Current Measuring Port
    Connect each Jumper (Default),
    If necessary connect the Current meter to measure the Current

4. DSA/DVGA EVB Default Setting with EVCI Board

4-4. DSA Setting with BDA4710 / BDA4730 EVB Kit

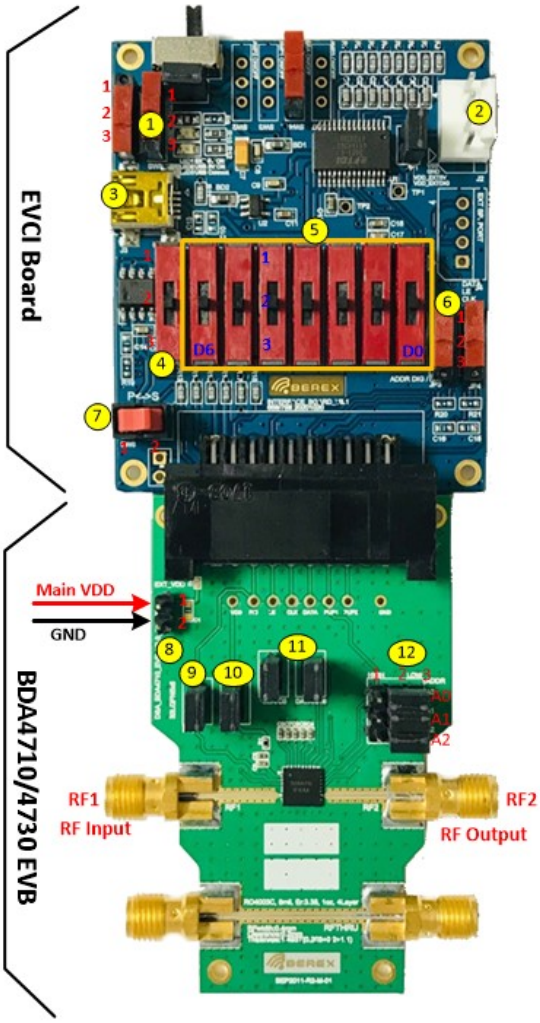

< Figure 6. BDA4710 EVB Kit >

Setting Products similar to BDA4710 are as follows
BDA4630 (6bit) / BDA4730

(1) VDD Selection Switch of EVCI Board
Connected pin 1-2 : Not used,
VDD supplied for EXT power supply from (2)
Connected pin 2-3 : VDD supplied from USB port (3)
Must be pin 2-3 connected

(2) EXT Power Supply Connector
Do Not use

(3) Mini USB Connector Port
Connect with PC to control the GUI and supply the VDD of EVCI Board

(4) LE Control Switch
Direct Parallel Mode : Switch to Pin 1
Latched Parallel Mode : Switch to Pin 2
Serial Mode : Switch to Pin 2

(5) Parallel Data Control Switch (7bit, D0 ~ D6)
Pin 1 : High, Pin 3 : Low
D0 : 0.25dB, D1 : 0.5dB, D2 : 1dB, D3 : 2dB, D4 : 4dB
D5 : 8dB, D6 : 16dB
See the **page 11** for more details

(6) VDD=3V be supplied for Address setting at (12)
Connect Pin 1 and 2

(7) Parallel / Serial Selection Switch
Parallel Mode : Switch to Pin 1
Serial Mode : Switch to Pin 2

All other switches and Connectors are not used.
So, no matter how you control this switch.

(8) Main Power Supply Connector for BDA4710 EVB
Pin 1 : VDD (3V to 5V)
Pin 2 : Ground

(9) P/S Pin Current Measuring Port
Connect Jumper (Default),
If necessary connect the Current meter to measure the Current

(10) BDA4710 Main Current Measuring Port
Connect Jumper (Default),
If necessary connect the Current meter to measure the Current

(11) SPI Clock and Data pin Current Measuring Port
Connect each Jumper (Default),
If necessary connect the Current meter to measure the Current

(12) Address Setting Connector
A2 A1 A0 = 0 0 0 → Address 0
A2 A1 A0 = 0 0 1 → Address 1
A2 A1 A0 = 0 1 0 → Address 2
A2 A1 A0 = 0 1 1 → Address 3
A2 A1 A0 = 1 0 0 → Address 4
A2 A1 A0 = 1 0 1 → Address 5
A2 A1 A0 = 1 1 0 → Address 6
A2 A1 A0 = 1 1 1 → Address 7
See the page 7 and 8 of BVA1762 datasheet for more details

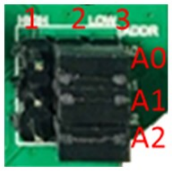

1 : DC 3V via EVCI Board (6)
2 : A0, A1, A2
3 : GND
When A2 A1 A0 = 000,
Connect 2 and 3 with jumper

4. DSA/DVGA EVB Default Setting with EVCI Board

4-5. DVGA Setting with BVA30x / BVA30xB / BVA30xC EVB Kit

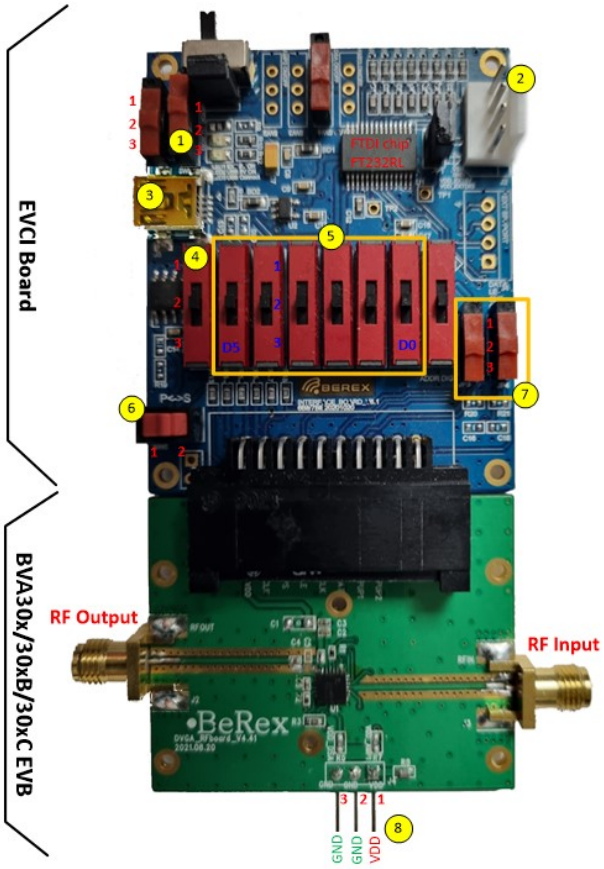

< Figure 7. BDA30xC EVB Kit >

Setting Products similar to BDA30x are as follows
BVA30xB / BVA30xC / BVA518(B), BVA2140(B)

(1) VDD Selection Switch of EVCI Board
Connected pin 1-2 : Not used,
VDD supplied for EXT power supply from (2)
Connected pin 2-3 : VDD supplied from USB port (3)
Must be pin 2-3 connected

(2) EXT Power Supply Connector
Do Not use

(3) Mini USB Connector Port
Connect with PC to control the GUI and supply the VDD of EVCI Board

(4) LE Control Switch
Direct Parallel Mode : Switch to Pin 1
Latched Parallel Mode : Switch to Pin 2
Serial Mode : Switch to Pin 2

(5) Parallel Data Control Switch (6bit, D0 ~ D5)
Pin 1 : High, Pin 3 : Low
D0 : 0.5dB, D1 : 1dB, D2 : 2dB, D3 : 4dB, D4 : 8dB, D5 : 16dB
See the page 11 for more details

(6) Parallel / Serial Selection Switch
Parallel Mode : Switch to Pin 1
Serial Mode : Switch to Pin 2

(7) PUP1 / PUP2 Setting Switch
Connected Pin 1-2: High
Connected Pin 2-3 : Low
Products with PUP function :
BDA4601, BVA30x(B), BVA518(B), BVA2140(B)
Don't be used in BVA30xC (BVA30xC don't need PUP function)

All other switches and Connectors are not used.
So, no matter how you control this switch.

(8) Main Power Supply Connector for BVA30x EVB
Pin 1 : VDD
Pin 2, 3 : Ground

4. DSA/DVGA EVB Default Setting with EVCI Board

4-6. DVGA Setting with BVA176x EVB Kit (Only Serial mode)

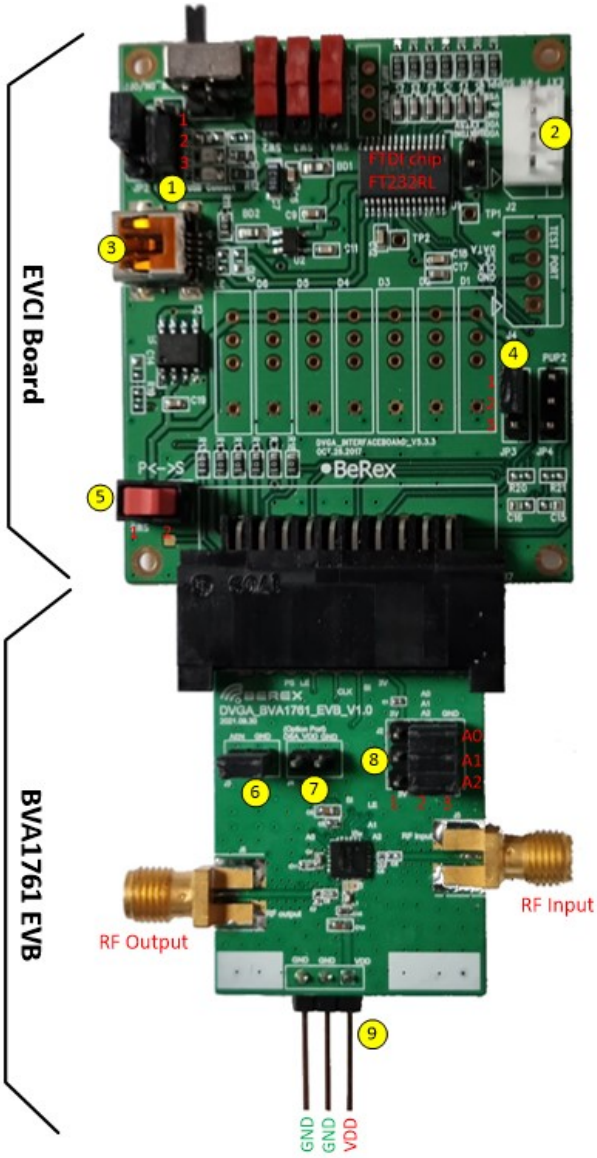

< Figure 8. BVA1761 EVB Kit >

Setting Products similar to BVA1761 are as follows
BVA1762

(1) VDD Selection Switch of EVCI Board
Connected pin 1-2 : Not used,
VDD supplied for EXT power supply from (2)
Connected pin 2-3 : VDD supplied from USB port (3)
Must be pin 2-3 connected

(2) EXT Power Supply Connector
Do Not used

(3) Mini USB Connector Port
Connect with PC to control the GUI and supply the VDD of EVCI Board

(4) VDD=3V be supplied for Address setting at (8)
Connect 1 and 2 with Jumper

(5) Parallel / Serial Selection Switch
Parallel Mode : Switch to Pin 1
Serial Mode : Switch to Pin 2
BVA1761 works only in Serial mode, so Must be selected pin 2

All other switches and Connectors are not used.
So, no matter how you control this switch.

(6) BVA1761 Amplifier enable / disable pin.
Jumper connected (to GND) : Amplifier ON
Supplied 1.2V~5V : Amplifier OFF

(7) Supply the VDD to DSAVDD (pin 5 of BVA1761)
No need connect because DSAVDD is also supplied via (9)
Refer to EVB Schematic
(See the page 33 of BVA1761 datasheet)

(8) Address Setting Connector
A2 A1 A0 = 0 0 0 → Address 0
A2 A1 A0 = 0 0 1 → Address 1
A2 A1 A0 = 0 1 0 → Address 2
A2 A1 A0 = 0 1 1 → Address 3
A2 A1 A0 = 1 0 0 → Address 4
A2 A1 A0 = 1 0 1 → Address 5
A2 A1 A0 = 1 1 0 → Address 6
A2 A1 A0 = 1 1 1 → Address 7
See the page 7 and 8 of BVA1761 datasheet for more details

1 : DC 3V via EVCI Board (4)
2 : A0, A1, A2
3 : GND
When A2 A1 A0 = 000,
Connect 2 and 3 with jumper

(9) Main VDD Supply for AMPVDD : 3.3V to 5V input
AMPVDD : pin 15 of BVA1761

4. DSA/DVGA EVB Default Setting with EVCI Board

4-7. DVGA Setting with BVA2761 EVB Kit (Only Serial mode)

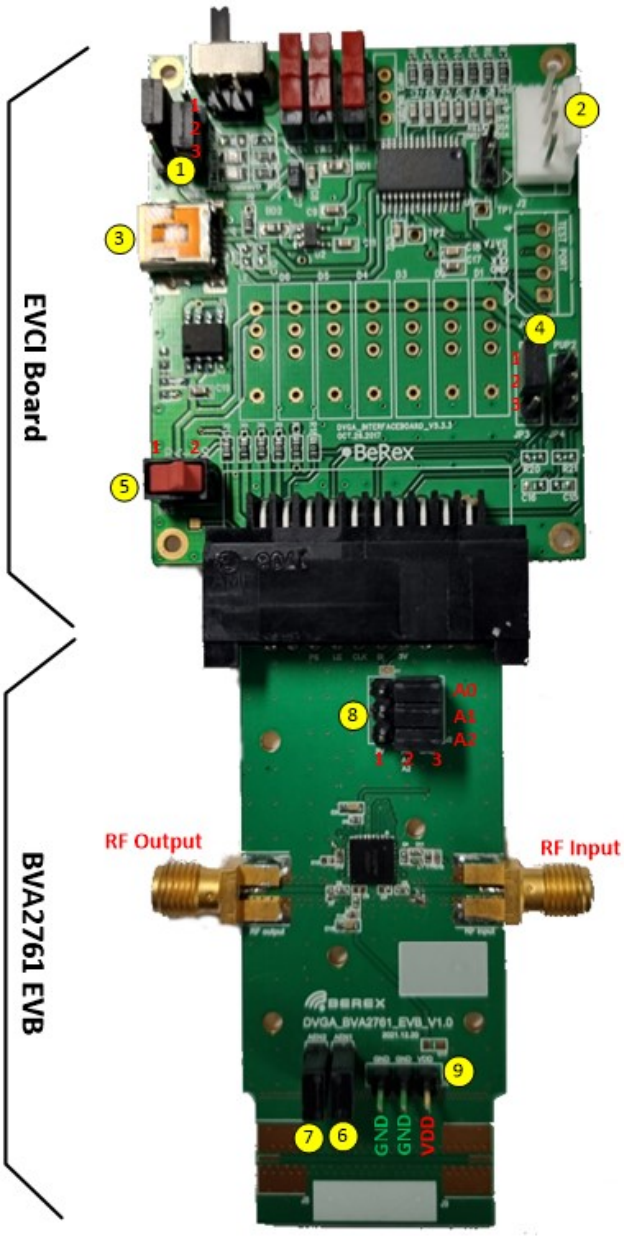

< Figure 9. BVA2761 EVB Kit >

(1) VDD Selection Switch of EVCI Board
Connected pin 1-2 : Not used,
VDD supplied for EXT power supply from (2)
Connected pin 2-3 : VDD supplied from USB port (3)
Must be pin 2-3 connected

(2) EXT Power Supply Connector
Do Not use

(3) Mini USB Connector Port
Connect with PC to control the GUI and supply the VDD of EVCI Board

(4) VDD=3V be supplied for Address setting at (8)
Connect 1 and 2 with Jumper

(5) Parallel / Serial Selection Switch
Parallel Mode : Switch to Pin 1
Serial Mode : Switch to Pin 2
BVA2761 works only in Serial mode, so Must be selected pin 2

All other switches and Connectors are not used.
So, no matter how you control this switch.

(6) BVA2761 Amplifier1 enable / disable pin. (pin 26 of BVA2761)
Jumper connected (to GND) : Amplifier ON
Supplied 1.2V~5V : Amplifier OFF

(7) BVA2761 Amplifier2 enable / disable pin. (pin 15 of BVA2761)
Jumper connected (to GND) : Amplifier ON
Supplied 1.2V~5V : Amplifier OFF

(8) Address Setting Connector
A2 A1 A0 = 0 0 0 → Address 0
A2 A1 A0 = 0 0 1 → Address 1
A2 A1 A0 = 0 1 0 → Address 2
A2 A1 A0 = 0 1 1 → Address 3
A2 A1 A0 = 1 0 0 → Address 4
A2 A1 A0 = 1 0 1 → Address 5
A2 A1 A0 = 1 1 0 → Address 6
A2 A1 A0 = 1 1 1 → Address 7
See the page 7 and 8 of BVA2761 datasheet for more details

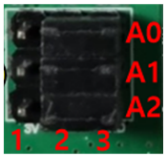

1 : DC 3V via EVCI Board (4)
2 : A0, A1, A2
3 : GND
When A2 A1 A0 = 000,
Connect 2 and 3 with jumper

(9) Main VDD Supply for BVA2761 : 3.3V to 5V input
(pin 7, 17, 28 of BVA2761)

4. DSA/DVGA EVB Default Setting with EVCI Board

4-8. DVGA Setting with BVA2762 EVB Kit (Only Serial mode)

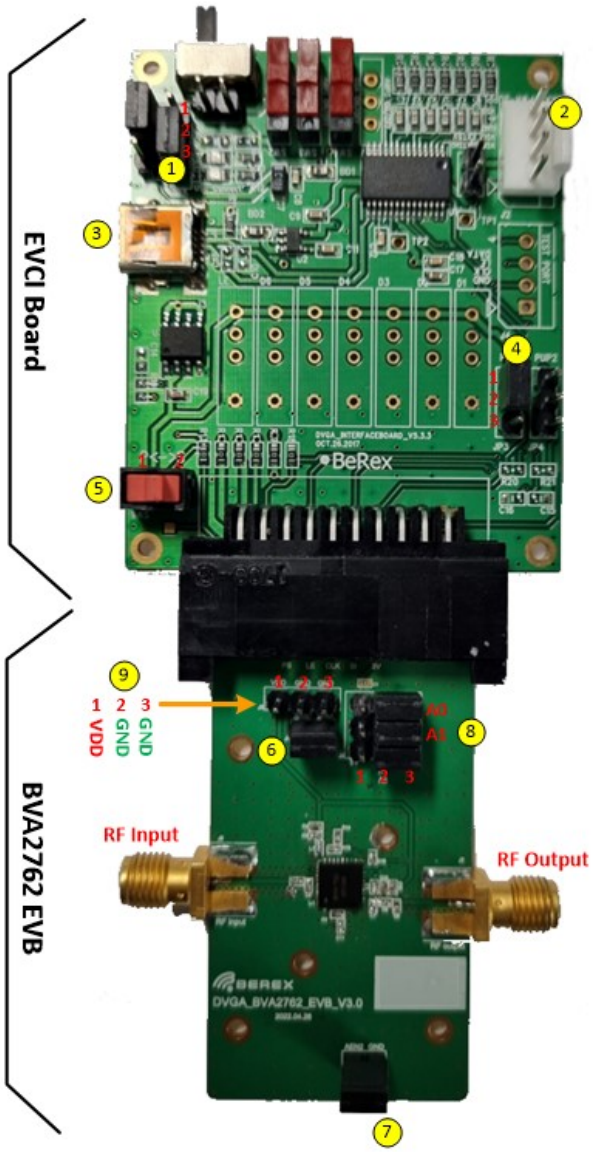

< Figure 10. BVA2762 EVB Kit >

(1) VDD Selection Switch of EVCI Board
Connected pin 1-2 : Not used,
VDD supplied for EXT power supply from (2)
Connected pin 2-3 : VDD supplied from USB port (3)
Must be pin 2-3 connected

(2) EXT Power Supply Connector
Do Not use

(3) Mini USB Connector Port
Connect with PC to control the GUI and supply the VDD of EVCI Board

(4) VDD=3V be supplied for Address setting at (8)
Connect 1 and 2 with Jumper

(5) Parallel / Serial Selection Switch
Parallel Mode : Switch to Pin 1
Serial Mode : Switch to Pin 2
BVA2762 works only in Serial mode, so Must be selected pin 2

All other switches and Connectors are not used.
So, no matter how you control this switch.

(6) BVA2762 Amplifier1 enable / disable pin. (pin 26 of BVA2762)
Jumper connected (to GND) : Amplifier ON
Supplied 1.2V~5V : Amplifier OFF

(7) BVA2762 Amplifier1 enable / disable pin. (pin 8 of BVA2762)
Jumper connected (to GND) : Amplifier ON
Supplied 1.2V~5V : Amplifier OFF

(8) Address Setting Connector
A1 A0 = 0 0 → Address 0
A1 A0 = 0 1 → Address 1
A1 A0 = 1 0 → Address 2
A1 A0 = 1 1 → Address 3
See the page 7 and 8 of BVA2762 datasheet for more details

1 : DC 3V via EVCI Board (4)
2 : A0, A1 (A2 is not used)
3 : GND
When A1 A0 = 00, (A2 is not used)
Connect 2 and 3 with jumper

(9) Main VDD Supply for BVA2762 : 4V to 5V input
(pin 10, 17, 24 of BVA2762)

4. DSA/DVGA EVB Default Setting with EVCI Board

4-9. DVGA Setting with BVA7242 EVB Kit (Only Serial mode)

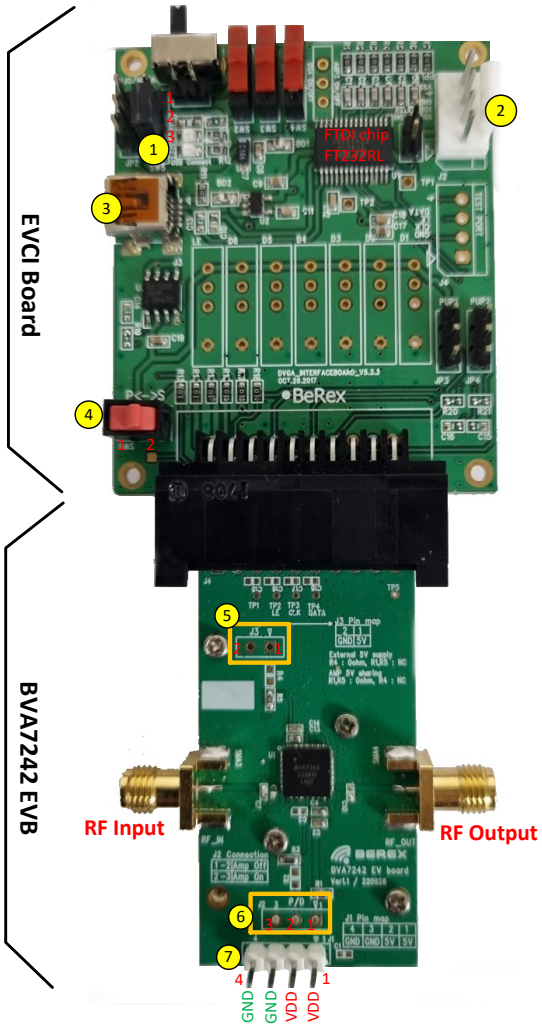

1 VDD Selection Switch of EVCI Board
Connected pin 1-2 : Not used,
VDD supplied for EXT power supply from 2
Connected pin 2-3 : VDD supplied from USB port 3
Must be pin 2-3 connected

2 EXT Power Supply Connector
Do Not use

3 Mini USB Connector Port
Connect with PC to control the GUI and supply the VDD of EVCI Board

4 Parallel / Serial Selection Switch
Parallel Mode : Switch to Pin 1
Serial Mode : Switch to Pin 2
BVA7242 works only in Serial mode, so Must be selected pin 2

All other switches and Connectors are not used.
So, no matter how you control this switch.

5 Supply the VDD to VDD_DSA (pin 28 of BVA7242)
No need connect because VDD_DSA is also supplied via 7

6 BVA7242 Amplifier enable / disable Port.
Connected pin 1-2 : Amplifier OFF
Connected Pin 2-3 : Amplifier ON
Not Connected : Amplifier ON

7 Main VDD Supply for AMPVDD : 3.3V to 5V input
AMPVDD : pin 12 of BVA7242

< Figure 11. BVA7242 EVB Kit >

Setting Products similar to BVA7242 are as follows
BVA3143/BVA3144/BVA3153, BVA7202, BVA7212

5. Additional Function Description of EVCI Board

5-1. Direct Parallel Control Switch (LE, D0 - D6(7bit), D0 - D5(6bit))

Set the D0 - D6 and LE mechanical control switches on board to support Direct Parallel, Latched Parallel, or Serial mode

a. **Serial or Latched Parallel mode** (using GUI application software on PC)
Place D0 - D6 and LE at the **middle position** to support Latched Parallel and Serial modes with GUI application software and proper position of P/S switch

b. **Direct Parallel mode** (Using SP3T switch on EVCI board without PC)
D0 - D6 can be set to **"HIGH"** or **"LOW"** to manually program the attenuation state while LE is connected to "HIGH" without using the USB Interface and GUI application software

<Figure 12. Direct Parallel Control Switch>

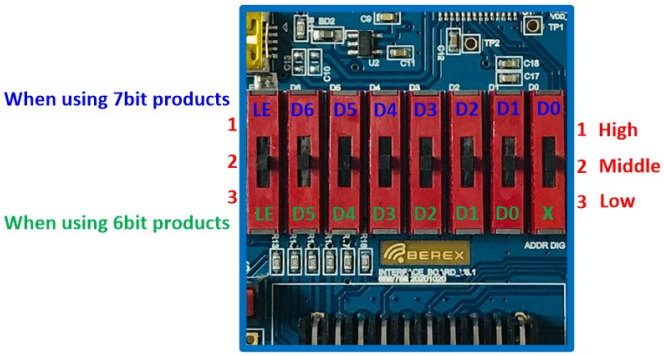

Table 3. SP3T Switch Descriptions for Parallel mode

Switch		Functionality	
6bit	7bit	6bit	7bit
-	D0	-	0.25dB
D0	D1	0.5dB	0.5dB
D1	D2	1dB	1dB
D2	D3	2dB	2dB
D3	D4	4dB	4dB
D4	D5	8dB	8dB
D5	D6	16dB	16dB
LE	LE	Latch enable	Latch enable

Table 4. Truth Table for the Parallel Control Word

7Bit	LE	D6	D5	D4	D3	D2	D1	D0	Attenuation State
6Bit	LE	D5	D4	D3	D2	D1	D0	X	
	High	Low	Low	Low	Low	Low	Low	Low	Reference Loss
	High	Low	Low	Low	Low	Low	Low	High	0.25dB (7bit only)
	High	Low	Low	Low	Low	Low	High	Low	0.5dB
	High	Low	Low	Low	Low	High	Low	Low	1dB
	High	Low	Low	Low	High	Low	Low	Low	2dB
	High	Low	Low	High	Low	Low	Low	Low	4dB
	High	Low	High	Low	Low	Low	Low	Low	8dB
	High	High	Low	Low	Low	Low	Low	Low	16dB
	High	High	High	High	High	High	High	Low	31.5dB
	High	High	High	High	High	High	High	High	31.75dB (7bit only)

6. Evaluation Control Interface board [EVCI] GUI installation

The EVCI GUI application runs on a MS-Windows compatible PC. Once software is downloaded on to the PC, make sure to unzip the folder and one must have one files, another one folder (EVCI GUI and Driver folder) in the unzipped folder. The latest version of EVCI GUI software is available on BeRex Website under specific product page.

6-1. EVCI GUI installation Using Sequence A

(FTDI Driver installation)

1. Connect the USB Cable to EVCI via PC.
2. Confirm the pop-up in window as shown Figure13. (Found New Hardware Wizard or Installing device driver software window will pop up)
3. Pop-up window click
4. Select "No, not this time" and click on the "Next" button to continue (Figure 15)
5. Confirm the word " USB SERIAL CONVERTER"
6. Select "Search for the best driver in these locations" and check box of " include this location in the search"

Then click on the "Browse" button and browse to the location you upzipped the USB drivers to in the previous step (CDM v2.12.28 WHQL certified folder, http://www.ftdichip.com/Drivers/VCP.htm)

7. Select the file "**FTDIBUS.INF**"
8. Windows will install the first driver

< Figure 13. USB Serial Converter Driver Installation for windows 8 and 7 >

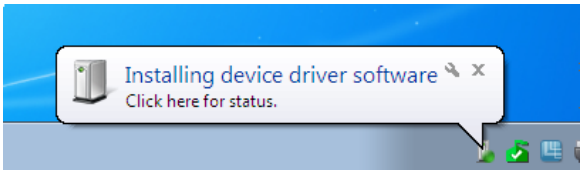

< Figure 14. USB Serial Converter Driver installation 1. >

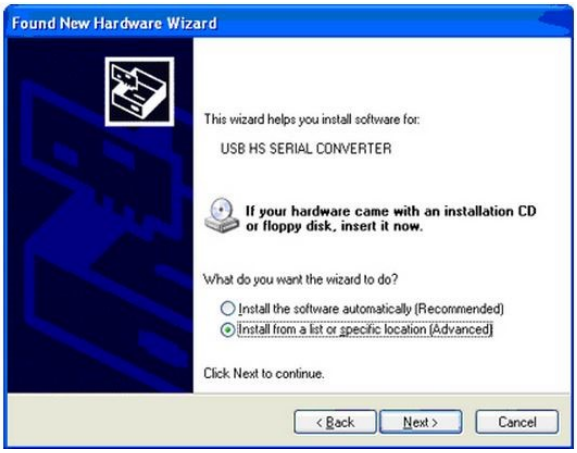

< Figure 15. USB Serial Converter Driver installation 2. >

< Figure 16. USB Serial Converter Driver installation 3. >

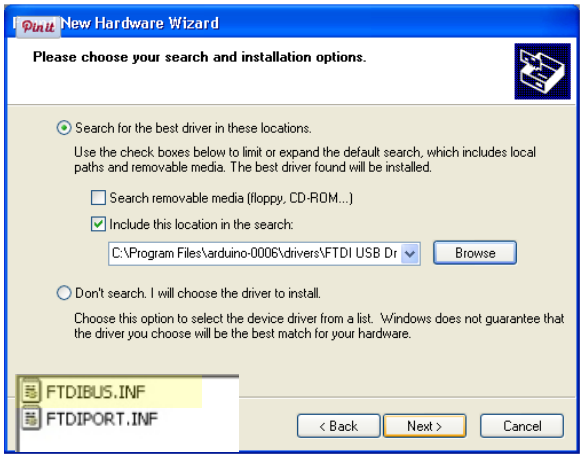

6. Evaluation Control Interface board(EVCI) GUI Installation

6-2. EVCI GUI installation Using Sequence B
(FTDI Driver installation)

1. The wizard will search for the driver and then tell you that a "USB Serial Port"
2. Pop-up window click
3. Confirm the word " USB SERIAL PORT" and Click "Next"
4. Select "Search for the best driver in these locations" and check box of " include this location in the search"
5. Then click on the "Browse" button and browse to the location you upzipped the USB drivers to in the previous step (CDM v2.12.28 WHQL certified folder)
6. Select the file "**FTDIPORT.INF**"
7. Windows will install the second driver. and then complete

< Figure 17. USB Serial Port Driver installation 1. >

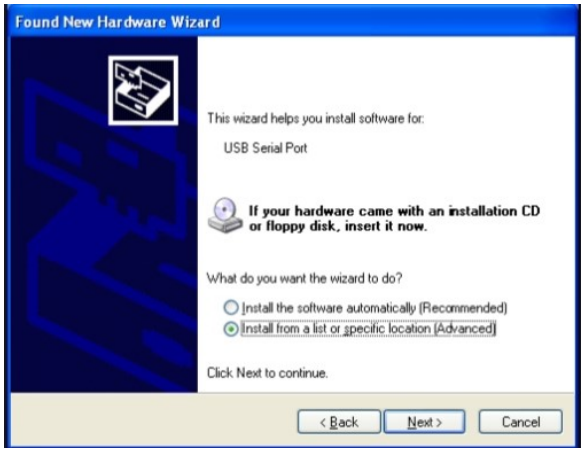

< Figure 18. USB Serial Port Driver installation 2. >

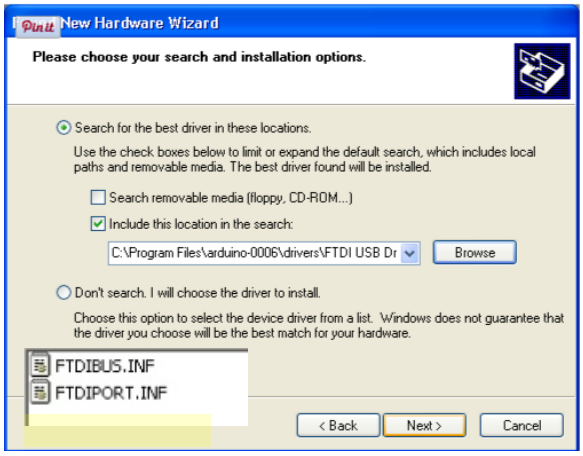

< Figure 19. USB Serial Port Driver installation 3. >

6. Evaluation Control Interface board[EVCI] GUI

6-3-1. EVCI GUI Running

1. Double Click “BeRex DSA V2.4” Icon
2. Running GUI and Control!

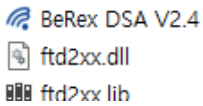

< Figure 20. BeRex EVCI GUI window>

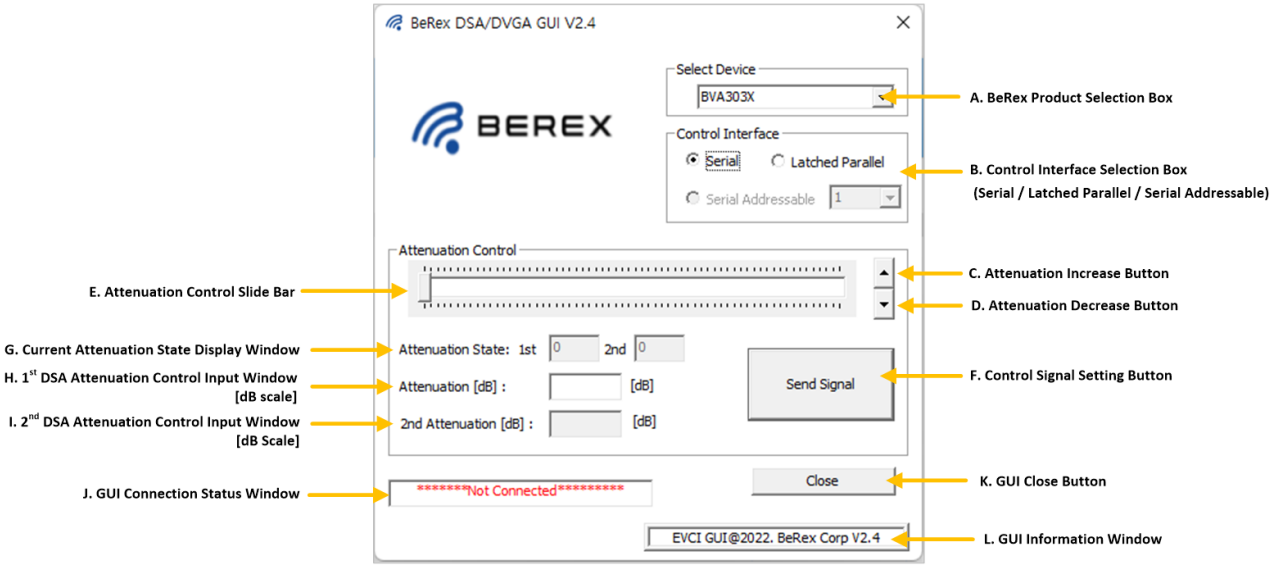

6-3-2. BeRex GUI Control method Sequence

1. Select Device Part Number (Figure.20 A)
2. Select control interface “Serial”, “Serial Addressable” or “Latched Parallel”
3. Set the Attenuation Control slide bar to control attenuation value you want (Figure.20 C,D,E)
4. Or input the number in Attenuation [dB] Control Input window (Figure.20 H)
5. Press button “Send Signal” and then activate Attenuator in Device

Note: If the EVCI board is not connected when the application software is launched, the message “ **Not connected** ” will appear at the GUI Connection status window

Contact Information

For technical questions and application information:
Email : sales@berex.com
Website : www.berex.com